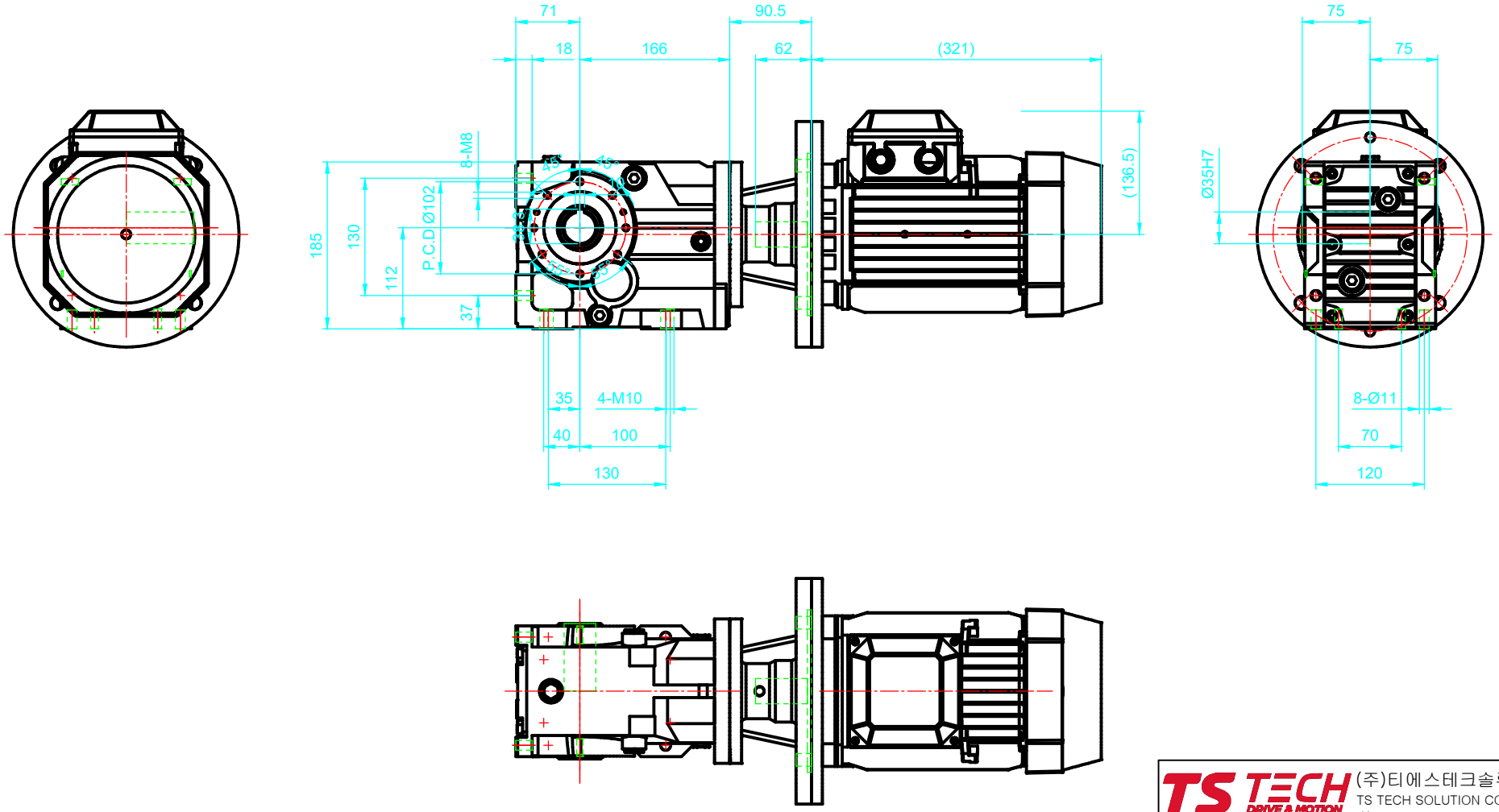

TS TECH DRIVE & MOTION
(주)티에스테크솔루션
TS TECH SOLUTION CORP, Korea
TEL. 02-6670-0090 FAX. 02-6670-0094

CUSTOMER APPROVEAL		AMEND			CUSTOMER						
MECHANICAL	ELECTRICAL	△			MODEL		THB47 100B5				
		△			DESCRIPTION						
		△			DRAWN		DATE		REV	A	SCALE
		△			CHECKED		DATE		UNIT	MM	PAGE –
					APPROVED		DATE				