iFit series

Rossi

Helical Inline, Bevel Helical and Parallel Shaft Helical gearmotors

rossi.com

TS TECH DRIVE & MOTION

(주)티에스테크솔루션

Contents

1	**Rossi for You**	**6**
1.1	Global presence, local service	8
2	**Product Overview**	**10**
2.1	Features & Benefits	12
2.2	Electric motors	14
2.3	Inverter	15
2.4	Product Range	16
3	**Symbols and units of measure**	**18**
3.1	Symbols and units of measure	20
3.2	Icons	22
4	**Product specifications**	**24**
4.1	General specifications	26
4.2	Operational conditions	30
4.3	Surface protection	33
4.4	Storage and warehousing	34
5	**Designation**	**36**
5.1	Coding	38
5.2	Nameplate data	48
6	**Project Planning**	**50**
6.1	Selection	52
6.2	Service factor *fs*	55
6.3	Efficiency	56
6.4	Thermal power *Pt*	57
6.5	Radial loads on low speed shaft end	60
6.6	Directions of rotation of iO low speed shaft	63
7	**Mounting positions**	**64**
7.1	Mounting positions	66
7.2	Plug position	69

8	**Structural and operational details**	**78**
8.1	Lubrication	80
8.2	Adapters for motors	83
8.3	Assembling the motor (IEC or NEMA) on adapter	85
8.4	Details of gearmotor fastening flanges	86
8.5	Details of output fastening flanges	88
8.6	Dimensional tolerances	89
8.7	Overall dimensional remarks	90
8.8	Protection caps	92
8.9	Fastening bolts	93
9	**Helical inline selection tables - iC**	**94**
9.1	Possible geometrical combinations	96
9.2	Geometrical coupling tables	97
9.3	Selection tables [kW]	106
10	**Helical inline dimensional drawings - iC**	**144**
10.1	iC 272 / iC 273	146
10.2	iC 372 / iC 373	148
10.3	iC 472 / iC 473	150
10.4	iC 572 / iC 573	152
10.5	iC 672 / iC 673	154
10.6	iC 772 / iC 773	156
10.7	iC 872 / iC 873	158
10.8	iC 972 / iC 973	160
11	**Bevel helical selection tables - iO**	**162**
11.1	Possible geometrical combinations	164
11.2	Geometrical coupling tables	165
11.3	Selection tables [kW]	172

12	**Bevel helical dimensional drawings - iO**	**196**
12.1	iO 373	198
12.2	iO 473	201
12.3	iO 573	204
12.4	iO 673	207
12.5	iO 773	210
12.6	iO 873	213
12.7	iO 973	216
13	**Parallel shaft helical selection tables - iP**	**220**
13.1	Possible geometrical combinations	222
13.2	Geometrical coupling tables	223
13.3	Selection tables [kW]	231
14	**Parallel shaft helical dimensional drawings - iP**	**260**
14.1	iP 272 / iP 273	262
14.2	iP 372 / iP 373	264
14.3	iP 472 / iP 473	266
14.4	iP 572 / iP 573	268
14.5	iP 672 / iP 673	270
14.6	iP 772 / iP 773	272
14.7	iP 872 / iP 873	274
14.8	iP 972 / iP 973	276
15	**Compact three-phase motor HB and brake motor HBZ**	**278**
13.1	Compact asynchronous three-phase motor HB	280
13.2	Technical data of compact asynchronous three-phase motor HB	282
13.3	Compact asynchronous three-phase brake motor HBZ	285
13.4	Technical data of compact asynchronous three-phase brake motor HBZ	289
16	**Installation and maintenance**	**292**
14.1	Safety	294
14.2	Installation and maintenance	295
17	**Gear selection data sheet**	**296**
16	**Technical formulae**	**297**

1

Rossi for You

Innovation
Rossi S.p.A. offers a wide range of solutions for an evolving industry, flexible and innovative gear reducers and gearmotors for customer tailored solutions to maximize performances and minimize the Total Cost of Ownership (TCO).

High quality, 3 years warranty
Our drive is to innovate and boost operations by manufacturing performing, precise, reliable and high-quality products all over the world. We are always one step forward in offering and developing solutions that can satisfy an unlimited number of application needs, even in the most demanding conditions.

Reliability
We are a reliable company with the right flexibility and know-how to respond to worldwide market requests, in all application fields, without leaving aside our commitment for the environment and value on human safety, to protect everyone's future.

Tools and processes
We continue to invest in new tools and processes, so our highly skilled specialist team in different fields are supporting you to find the best solution suitable for your demands, always by your side on every step of the project.

After-sale service
Highly trained mechanics and support teams can ensure a fast and efficient after-sale service providing support worldwide.

Digital support
Alongside our 24/7 Rossi for You portal you have a suite of digital support tools enabling real time access to your order tracking, invoices, spare part tables download and contact to our service.

70
YEARS

Experience
Shaped by 70 years of history Rossi meets your unique needs whether you need a standard design or a customized solution.

Rossi

1.1

Global presence local service

Local support
Sales, customer service, technical support, spare parts

17 affiliated companies*

Worldwide distribution network*

A global network of subsidiaries and dealers. From design and execution to after-sales service. Rossi is always close to you: a local, reliable and flexible partner.

Alongside our 24/7 **Rossi for You** portal you have a suite of digital support tools enabling real time access to your order tracking, invoices, spare part tables download and contact to our service.

*All contacts available on **www.rossi.com**

Main offices | Affiliated companies | Production facilities/Assembly plants

United Kingdom
Coventry

Netherlands
Panningen

Germany
Dreieich

Poland
Wroclaw

Turkey
Izmir

Spain
Barcelona

France
Saint Priest

Italy
Modena

Ganaceto

Lecce

South Africa
La Mercy

India
Coimbatore

Malaysia
Kuala Lumpur

Australia
Perth

China
Shanghai

Suzhou

Taiwan
Kaohsiung City

2

Product Overview

Section contents

2.1	Features & Benefits	12
2.2	Electric motors	14
2.3	Inverter	15
2.4	Product Range	16

2.1

Features & Benefits

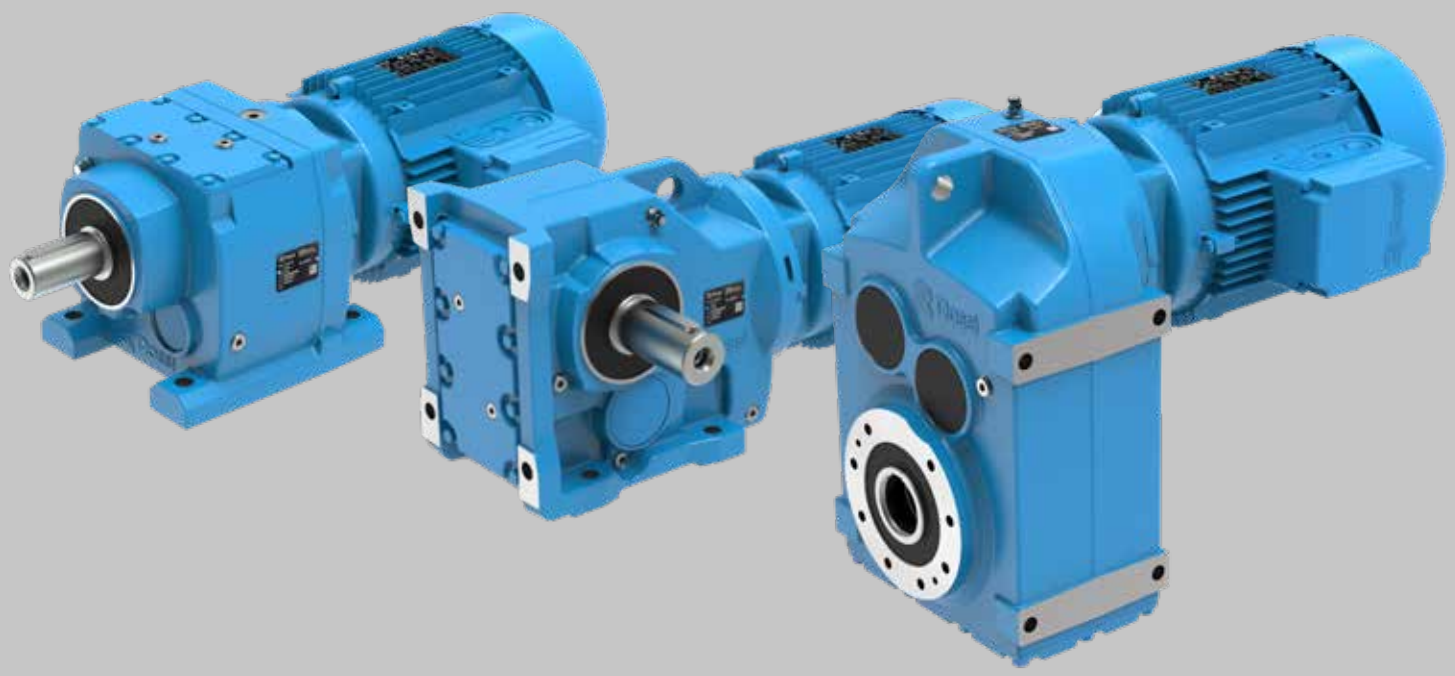

Fully interchangeable

Plug&Play.
No re-engineering costs.

100% made in EU

Superior quality,
minimum maintenance

Cast iron housing

Maximum performance and
reliability

Gear precision DIN/ISO 6

Energy saving, low noise level,
reduced backlash

IE3 electric motors

Premium efficiency

High quality

Long life lubrication. Dedicated
motor side sealing system

Compact design

Wash down capability thanks to round
shaped, smooth housing surface

High performance

Up to 12% higher
than market standard

Additional benefits

- High Customer Value
- Short Lead Times for standard products
- 3 Years Guarantee

2.2

Electric motors

- Standard and brake motors
- IE3 class of the international efficiency standard (IEC 60034-30) ⩾ 0,75 kW
- IE2 class of the international efficiency standard (IEC 60034-30) ⩽ 0,55 kW
- Multivoltage, 2, 4 and 6 poles
- Aluminium frame
- Cable entry possible from two sides
- Motor insulation class F, rise temperature B

COMPLIANCE

- Test reports
- Machinery Directive 2006/42/EC
- Directive 2011/65/EC RoHS
- Directive «ErP» 2009/125/EC

PROTECTION/PAINTING

- Blue RAL 5010 paint with corrosivity class C3 as standard (hard and smooth clinging painting)
- IP 55

OPTIONS

- Motor insulation class H
- Bi-metal type thermal probes
- Thermistor type (PTC) thermal probes
- Motor with connectors
- Anti-condensation heater
- Forced fan cooling (IC 416)
- Drip-proof cover
- Double shaft extension
- Incremental encoder sin/cos
- Optional painting
- Optional protection grades IP 56 ... IP 66
- c UL us motors certified to UL
- EISA Premium Efficiency (IE3)
- INMETRO ABNT NBR-17094-1 (IR3)

2.3

Inverter

- Max overloads: up to 200%
- Best sensor-less ability to handle overloads
- Flexibility in motor-mounted or wall-mounted installation
- Full "Plug & Play"
- Autotuning, software programming and updating included
- In compliance with IE2 class ECODESIGN EN 50598 IEC/EN 60034-30-1 and Ecodesign Directive in accordance with IEC 61800-9-2
- Remote commissioning, monitoring and diagnostics, Bluetooth, App and Safety (STO)
- Communication and connection among several inverters
- A wide range of Field buses
- Comprehensive options range, components and design concept guarantee the best reliability and vibration resistance. Dust-tight and protected against water jets (IP 65).

Product range

28 | 100 | 1000

A Series
Worm

N m
14 sizes

32	40	40	71	50	128	63	219	64	261	80	422	81	500	100	830	125	1330	126	1580

AS series
Worm Standardfit

N m
6 sizes

118	35.5	225	60	325	118	430	212	535	355	742	670

E Series
Helical inline

N m
16 sizes

32	37	40	75	41	95	50	160	51	224	63	335	64	450	80	670	81	900	100	1320

iFIT Series
Helical inline

N m
8 sizes

27	145	37	224	47	335	57	500	67	670	77	925	87	1750

iFIT Series
Bevel helical

N m
7 sizes

37	224	47	450	57	670	67	900	77	1700

iFIT Series
Parallel shaft helical

N m
8 sizes

27	145	37	224	47	450	57	650	67	925	77	1700

G Series
Helical and bevel helical

N m
20 sizes

40	85	50	206	63	387	64	487	80	825	81	975	100	1700

GX Series Extruder
Helical and bevel helical

N m
16 sizes

100	1400

H series
Helical and bevel helical

N m
12 sizes

EP Series
Planetary

N m
24 sizes

001	1600

EPS Series
Planetary Slewing

N m
10 sizes

SR series
Worm

N m
10 sizes

32	43	40	82	50	151	63	254	64	302	80	493	81	586	100	1203	125	1573

SR series
Helical inline

N m
11 sizes

32	29	40	68	41	82	50	142	51	180	63	291	64	365	80	587	81	735	100	1139	101	1509

SR series
Helical and bevel helical

N m
9 sizes

40	73	50	154	63	315	64	375	80	633	81	755	100	1400

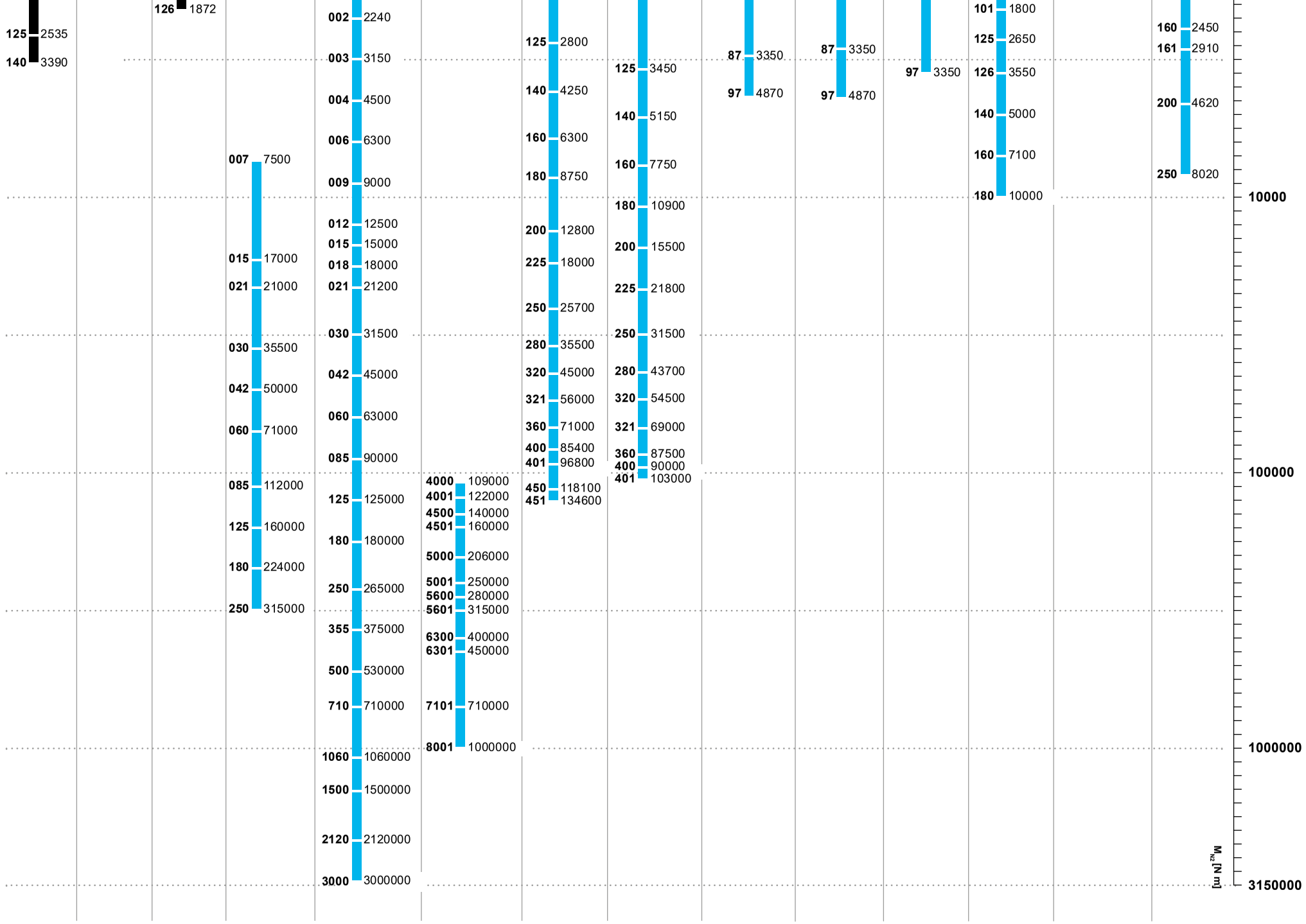
125 2535
140 3390
126 1872
007 7500
015 17000
021 21000
030 35500
042 50000
060 71000
085 112000
125 160000
180 224000
250 315000
002 2240
003 3150
004 4500
006 6300
009 9000
012 12500
015 15000
018 18000
021 21200
030 31500
042 45000
060 63000
085 90000
125 125000
180 180000
250 265000
355 375000
500 530000
710 710000
1060 1060000
1500 1500000
2120 2120000
3000 3000000
4000 109000
4001 122000
4500 140000
4501 160000
5000 206000
5001 250000
5600 280000
5601 315000
6300 400000
6301 450000
7101 710000
8001 1000000
125 2800
140 4250
160 6300
180 8750
200 12800
225 18000
250 25700
280 35500
320 45000
321 56000
360 71000
400 85400
401 96800
450 118100
451 134600
125 3450
140 5150
160 7750
180 10900
200 15500
225 21800
250 31500
280 43700
320 54500
321 69000
360 87500
400 90000
401 103000
87 3350
97 4870
87 3350
97 4870
97 3350
101 1800
125 2650
126 3550
140 5000
160 7100
180 10000
160 2450
161 2910
200 4620
250 8020
10000
100000
1000000
3150000
M_{kz} [N m]

3

Symbols and units of measure

Section contents

3.1 Symbols and units of measure 20

3.2 Icons 22

Symbols and units of measure 3

3.1

Symbols and units of measure

Symbols	Description	Unit of Measure SI
fs	service factor	
f_T	thermal factor	
H	altitude	[m]
IP..	protection degree	
J	moment of inertia of mass	[kg m^2]
M	torque	[N m]
n	rotational speed	[min^{-1}]
p	weight	[kg]
P	power	[kW]
S1...S10	duty cycle	
T	temperature	[°C]
t	time	[s]
v	linear speed	[m/s]
z	number of starts per hour	[start/h]
Gear reducer		
η	efficiency	
η_s	static efficiency	
F_{r1}	radial loads on high speed shaft	[N]
F_{r2}	radial loads on low speed shaft	[N]
F_{a1}	axial loads on high speed shaft	[N]
F_{a2}	axial loads on low speed shaft	[N]
i	transmission ratio	
L_h	bearing life	[h]
M_{N1}	nominal torque on high speed shaft	[N m]
M_{N2}	nominal torque on low speed shaft	[N m]
M_1	nominal torque on high speed shaft	[N m]
M_2	nominal torque on low speed shaft	[N m]
M_{2max}	maximum torque on low speed shaft	[N m]
M_s	tightening torque for fastening bolts	[N m]
n_1	rotation speed of high speed shaft	[min^{-1}]
n_2	rotation speed of low speed shaft	[min^{-1}]
P_{N1}	nominal power on high speed shaft	[kW]
P_{N2}	nominal power on low speed shaft	[kW]
P_T	thermal power	[kW]
P_{TN}	nominal thermal power	[kW]
P_1	power on high speed shaft	[kW]
P_2	power on low speed shaft	[kW]

Symbols	Description	Unit of Measure SI
	Motor	
$\cos\varphi$	power factor	
C_{max}	maximum brake disk wear	[mm]
η	motor efficiency	
f	supply frequency	[Hz]
I_N	motor nominal current	[A]
I_S	starting current of the motor	[A]
J_0	moment of inertia (of mass) of the motor	[kg m^2]
M_S	starting torque, with direct on-line start	[N m]
M_{max}	maximum torque, with direct on-line start	[N m]
M_N	nominal torque of the motor	[N m]
M_{fmax}	maximum braking torque	[N m]
M_f	calibration braking torque	[N m]
n_N	number of motor nominal rotations	[min^{-1}]
P_N	motor nominal power	[kW]
t_a	starting time	[s]
t_f	braking time	[s]
t_1	delay of brake anchor release	[ms]
t_2	delay of braking	[ms]
t_{2cc}	braking delay with d.c. rectifier	[ms]
U	supply voltage	[V]
W_1	work of friction generating a brake disk wear of 1 mm	[MJ/mm]
W_{max}	maximum work due to friction for each braking	[J]

3.2

Icons

Icons	Description
p.	refer to page
	attention
▼	breather plug
●	level plug
■	drain plug
▽	breather plug not in view (opposite side)
	level plug not in view (opposite side)
	drain plug not in view (opposite side)
iC	iFIT helical inline gearmotor
iO	iFIT bevel helical gearmotor
iP	iFIT parallel shaft helical gearmotor

Icons	Description
kg	weight (without oil)
l	oil quantity
2	**iC** - 2 reduction stages
3	**iC** - 3 reduction stages
3	**iO** - 3 reduction stages
2	**iP** - 2 reduction stages
3	**iP** - 3 reduction stages
	refer to motor section
	refer to section motor adapters
	refer to section geometrical pairings
FB14	refer to section output flange B14 iO
FB14	refer to section output flange B14 iP

page intentionally left blank

4

Product specifications

Section contents

4.1	General specifications	26
4.1.1	Gear reducer	29
4.1.2	Electric three-phase motor	29
4.2	Operational conditions	30
4.2.1	Operational ambient temperature	30
4.2.2	Installation altitude	30
4.2.3	Duty cycles	31
4.2.4	Frequency 60 Hz	32
4.2.5	Speed	32
4.2.6	Sound levels	32
4.2.7	Accessibility and heat dissipation	32
4.2.8	Weights	32
4.2.9	Reduced backlash	32
4.2.10	Low speed shaft seals	32
4.3	Surface conditions	33
4.4	Storing	34

4.1

General specifications

Helical inline gearmotors - iC

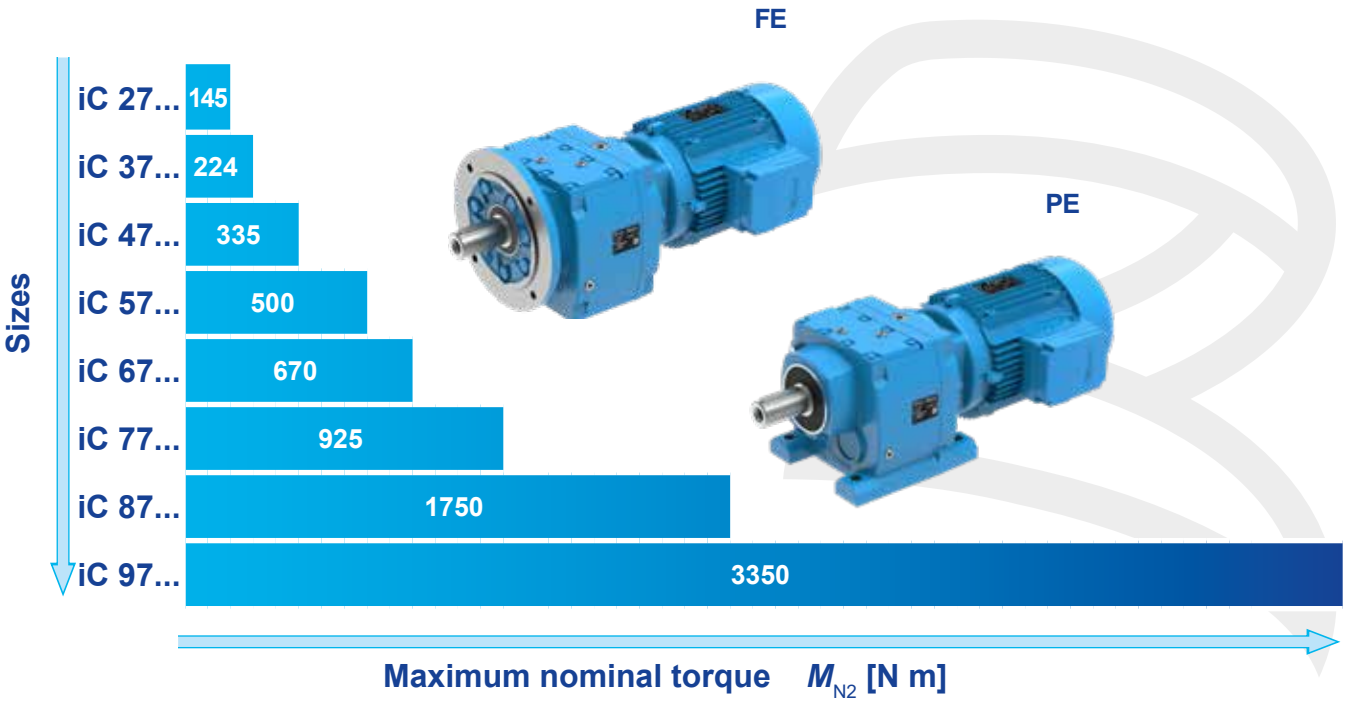

		iC 27...	iC 37...	iC 47...	iC 57...	iC 67...	iC 77...	iC 87...	iC 97...
Solid low speed shaft diameter	[mm]	25	25	30	35	35	40	50	60
Shaft height (design PE)	[mm]	90	90	115	115	130	140	180	225
B5 flange diameter (design FE)	[mm]	120...160	120...200	140...200	160...250	200, 250	250, 300	300, 350	350, 450
Maximum nominal torque	[N m]	145	224	335	500	670	925	1750	3350
Maximum nominal radial load	[N]	4230	4940	5420	7100	6980	9900	16900	19800

- **Maximum interchangeability** (shaft height, low speed shaft end, foot dimensions and fitting holes, designs), and performance equal or higher than market standards;
- **IE3, IE2 efficiency motors**;
- **foot mounting** (foot mounted gear reducer housing), **flange mounting** (up to 4 flanges for each gear reducer size),
- **gear reducer cast iron single piece housing**, high stiffness and dimensional accuracy;
- generously proportioned bearings of **low speed shaft** (bearings and shaft) in order to withstand high loads on shaft end;
- **high manufacturing quality standard**
- **high, reliable and tested performances**
- **compact motors**, under accuracy rating, also in brake version, suitable for applications with inverter.

Bevel helical gearmotors - iO

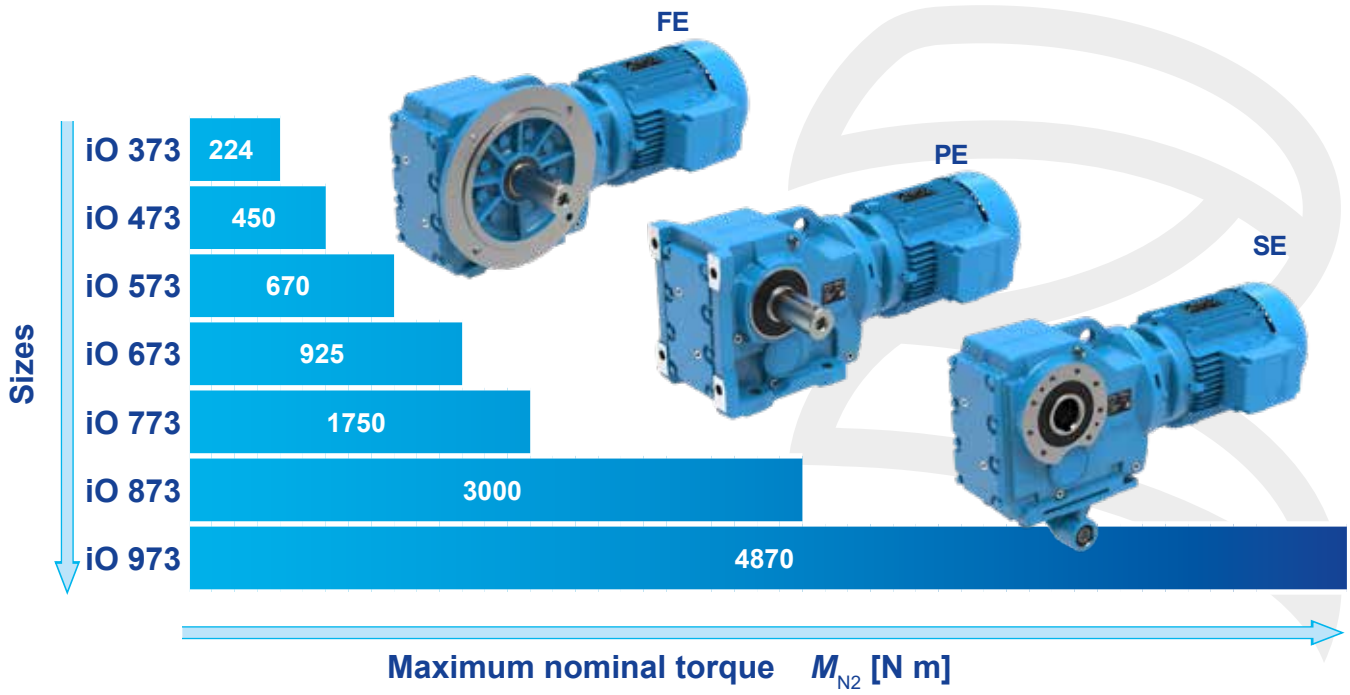

		iO 37	iO 47	iO 57	iO 67	iO 77	iO 87	iO 97
Solid low speed shaft diameter	[mm]	25	30	35	40	50	60	70
Hollow low speed shaft diameter	[mm]	30	35	40	40	50	60	70
Shaft height (design PE, SE)	[mm]	100	112	132	140	180	212	265
B5 flange diameter (design FE)	[mm]	160	200	250	250	300	350	450
Maximum nominal torque	[N m]	224	450	670	925	1750	3000	4870
Maximum nominal radial load	[N]	5640	5920	7630	12300	16100	27300	40000

- **Maximum interchangeability** (shaft height, low speed shaft end, foot dimensions and fitting holes, designs), and performance equal or higher than market standards;
- **IE3, IE2 efficiency motors**;
- **foot mounting** foot mounted gear reducer housing), **flange mounting**, **shaft mounted;**
- **gear reducer cast iron single piece housing**, high stiffness and dimensional accuracy;
- generously proportioned bearings of **low speed shaft** (bearings and shaft) in order to withstand high loads on shaft end;
- **high manufacturing quality standard**
- **high, reliable and tested performances**
- **compact motors**, under accuracy rating, also in brake version, suitable for applications with inverter.

4.1

General specifications

Parallel shaft helical gearmotors - iP

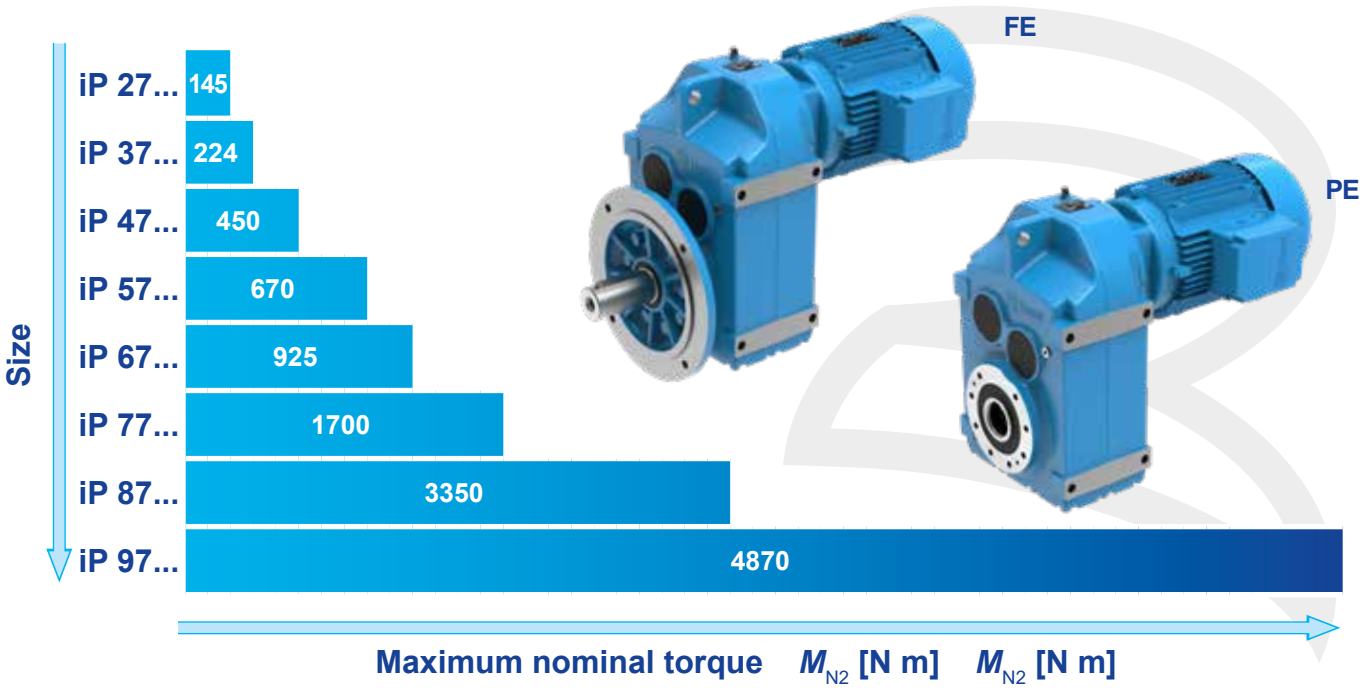

		iP 27...	iP 37...	iP 47...	iP 57...	iP 67...	iP 77...	iP 87...	iP 97...
Solid low speed shaft diameter	[mm]	25	25	30	35	40	50	60	70
Hollow low speed shaft diameter	[mm]	25	30	35	40	40	50	60	70
Shaft height (design PE)	[mm]	75	82,5	90	100	106	135	165	200
B5 flange diameter (design FE)	[mm]	160	160	200	250	250	300	350	450
Maximum nominal torque	[N m]	145	224	450	670	925	1700	3350	4870
Maximum nominal radial load	[N]	4500	4290	5920	9200	10300	15700	19800	29900

- **Maximum interchangeability** (shaft height, low speed shaft end, foot dimensions and fitting holes, designs), and performance equal or higher than market standards;
- **IE3, IE2 efficiency motors**;
- **foot mounting** (foot mounted gear reducer housing), **flange mounting**;
- **gear reducer cast iron single piece housing**, high stiffness and dimensional accuracy;
- generously proportioned bearings of **low speed shaft** (bearings and shaft) in order to withstand high loads on shaft end;
- **high manufacturing quality standard**
- **high, reliable and tested performances**
- **compact motors**, under accuracy rating, also in brake version, suitable for applications with inverter.

4.1.1 Gear reducer

Main structural features:

- cast iron single-piece housing 250 UNI ISO 185 with stiffening ribs and high lubricant capacity;
- low speed shaft ball or tapered roller bearings (on request for sizes ≥ iO 47 and ≥ iP 47 with hollow low speed shaft) amply sized to carry heavy loads on the low speed shaft end;
- pinion of final reduction with three bearings (sizes ≥ iC 57) in order to ensure the best meshing conditions (no overhung wheel, maximum rigidity and overload capacity, maximum reduction of noise level);
- first reduction stage pinion directly fitted with interference onto the motor shaft end;
- Gleason helical spur and spiral bevel gears with ground profile for maximum load capacity, smooth operation and quietness;
- gears load capacity calculated for tooth breakage and pitting according to standard ISO;
- oil-bath lubrication; all sizes are supplied filled with polyglycol synthetic oil (PAG), "for life" lubrication;
- metal plugs (filler plug with valve; drain plug; level plug);
- paint: external coating with two-component water-based acrylic enamel appropriate for resistance to normal industrial environments (corrosivity class C3 ISO 12944-2); color blue RAL 5010 DIN 1843; internal protection with paint providing resistance to synthetic oils.

4.1.2 Electric three-phase motor

Dimensions and masses of gearmotors described in present catalog are referred to standard motor and brake motors of catalog TX.

Main structural features:

- compact motor: asynchronous three-phase, totally-enclosed, externally ventilated, with cage rotor;
- IP 55 protection, insulation class F, temperature rise class B;
- rated power delivered on continuous duty (S1) and referred to nominal voltage and frequency, ambient temperature 40 °C and maximum altitude 1000 m.
- suitable for running with inverter (generous electromagnetic sizing, low-loss eletrical stamping, phase separators, etc.);
- design available for every application need: flywheel, independent cooling fan, independent cooling fan and encoder, etc.
- paint: external protection with two-component water-based acrylic enamel appropriate for resistance to normal industrial environments (corrosivity class C3 ISO 12944-2); color blue RAL 5010 DIN 1843.

Brake motor main structural features

- particularly strong construction to withstand braking stresses; maximum reduction of noise level;
- spring-loaded d.c. electromagnetic brake; feeding from the terminal box;
- brake can also be independently fed directly from the line;
- braking torque proportioned to motor torque (usually $M_f \approx 2\ M_N$);
- rapid, precise stopping;
- hand lever for manual release with automatic return; removable lever rod.

For other specifications and details see specific documentation of catalog TX.

Specific standards for electric motors:

- nominal powers and dimensions to CENELEC HD 231 (IEC 72-1, CNR-CEI UNEL 13117-71 and 13118-71, DIN 42677, NF C 51- 120, BS 5000-10 and BS 4999-141) for mounting positions IM B5, IM B14 and derivatives;
- nominal performances and running specifications to CENELEC EN 60034-1 (IEC 34-1, CEI EN 60034-1, DIN VDE 0530-1, NF C51-111, BS EN 60034-1);
- protection to CENELEC EN 60034-5 (IEC 34-5, CEI 2-16, DIN EN 60034-5, NF C51-115, BS 4999-105);
- mounting positions to CENELEC EN 60034-7 (IEC 34-7, CEI EN 60034-7, DIN IEC 34-7, NF C51-117, BS EN 60034-7);
- sound levels to CENELEC 60034-9 (IEC 34.9, DIN 57530 pt. 9);
- balancing and vibration velocity (vibration under standard rating N) to CENELEC HD 53.14 S1 (IEC 34-14, ISO 2373 CEI 2-23, BS 4999-142); motors are balanced with half key inserted into shaft extension;
- cooling to CENELEC EN 60034-6 (CEI 2-7, IEC 34-6): standard type IC 411; type IC 416 for non-standard design with axial independent cooling fan.

4.2

Operational conditions

4.2.1 Operational ambient temperature

Gear reducers

Gear reducers are suitable for operation at ambient temperature 0 °C / +40 °C (with peaks down to -20 °C / +50 °C).
The operation outside this range, with a minimum of -40 °C and a maximum of +60 °C, must be evaluated in relation to the specific operating conditions, duty cycle, type of lubricant, type of seals and cooling/heating system (where possible); please contact Rossi S.p.A.
The catalog data are based on an operational ambient temperature of 25 °C (see pages 57 and 58).

Motors

HB series motors are suitable for operation in an ambient temperature range of -15°C / +40°C.
The operation outside this range is possible by adopting some precautions: contact Rossi S.p.A.
For drives with inverters, it is necessary to take into account the higher thermal stresses to which the motor windings may be subjected.
If needed, contact Rossi S.p.A.

4.2.2 Installation altitude

Installation altitude affects the effectiveness of convection heat dissipation; heat dissipation capacity decreases as installation altitude increases.
Catalog data are referred to a maximum altitude of 1000 m.

4.2.3 Duty cycles

Continuous duty (S1)
Operation at a constant load maintained for sufficient time to allow the motor to reach thermal equilibrium.
Abbr. S1

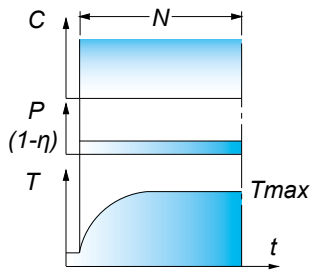

Short time duty (S2)
Running at constant load for a given period of time less than that necessary to reach normal running temperature, followed by a rest period long enough for motor's return to ambient temperature.
Abbr. S2 + time N (minimum)

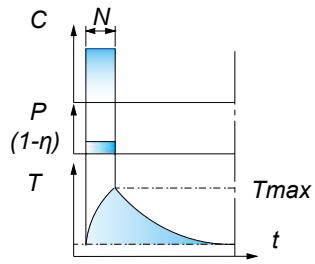

Intermittent periodic duty (S3)
Succession of identical work cycles consisting of a period of running at constant load and a rest period. Current peaks on starting are not to be of an order that will influence motor heat to any significant extent.
Abbr. S3 + cyclic duration factor

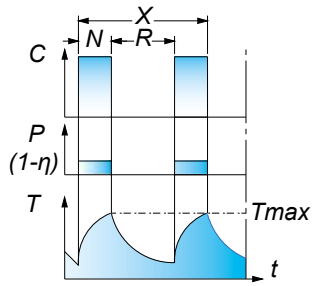

Cyclic duration factor = N/(N+R)·100 [%]

where

N = running time at constant load
R= rest time
For values of N+R > 10 min contact Rossi S.p.A.

In case of a duty-requirement type S2 ... S10 the motor power can be increased as per the following table; starting torque keeps unchanged.

Duty cycle			Motor size		
			63 ... 90	**100 ... 132**	**160 ... 200**
S2	duration of running	**90 min**	1	1	1,06
		60 min	1	1,06	1,12
		30 min	1,25	1,18	1,25
		10 min	1,25	1,25	1,32
S3	cyclic duration factor	**60%**	1,12		
		40%	1,18		
		25%	1,25		
		15%	1,32		
S4 ... S10			Contact Rossi S.p.A.		

4.2.4 Frequency 60 Hz

Motors up to size 132 wound for 50 Hz can be fed at 60 Hz keeping in mind the variation of nominal specifications, see specific documentation of TX series catalog.

4.2.5 Speed

Gearmotor low speed shaft rotation speeds indicated in the catalog are determined from the nominal HB motor speed under nominal operating conditions and gear reducer transmission ratio.
Actual speed may deviate from this value depending on load, actual operating conditions and power system.

4.2.6 Sound levels

The standard levels of sound power emission L_{WA} relevant to the gearmotors of this catalog, running at nominal load and speed, fulfill the limits settled by VDI 2159 for gear reducers and EN 60034 for motors.

4.2.7 Accessibility and heat dissipation

Position the gearmotor so as to allow a free passage of air for cooling both gear reducer and motor (especially at motor fan side).
Avoid any obstruction to the air-flow; heat sources near the gear reducer that might affect the temperature of cooling-air and of gear reducer for radiation; insufficient air recycle or any other factor hindering the steady dissipation of heat.
Also provide adequate spacing or shielding of heat-sensitive components (motor, brake, motor-inverter, electronic components, etc.) from hot surfaces of the driven machine, and provide adequate accessibility space for maintenance operations.

4.2.8 Weights

The weights shown in the catalog refer to gearmotors without lubricating oil.
Actual weights may vary depending on size, gearbox, transmission ratio, motor and whether there are accessories or special designs.

4.2.9 Reduced backlash

It is possible to supply the gearmotor in reduced backlash design for sizes ≥ iC 37, ≥ iO 373 and ≥ iP 373. The values are given in paragraph 9.2 in the “Geometric Coupling Tables” and refer to the low speed shaft with locked high speed shaft.
They are valid in the absence of applied loads (max. 0,01 of the nominal load of the gear reducer), with the gear reducer at ambient temperature (25 °C) and are subject to a tolerance of ± 2 arc min.

If the value is not specified, the reduced backlash option is not available.

4.2.10 Low speed shaft seals

For aggressive environmental conditions or particularly severe operating conditions, the option “Sealing rings (gear reducer and motor) in fluoride compound” is available.
For gear reducer size ≥ iC 37 with flange and size ≥ iO 473 and ≥ iP 473 with flange and solid shaft it is possible to have the option «Double seal on low speed shaft».

The gearmotors are protected externally (painting) with a water-based polyacrylic resin paint, suitable for withstanding normal indoor and outdoor industrial environments; Free from chemicals, pollution and salinity (classified C3-Low according to ISO 12944-2, color blue RAL5010).

Other paints and protection degrees are available on request as per table below.

Field of use	Features	Corrosivity class ISO 12944-2	Durability class ISO 12944-2	Description treatment	Thickness cycle NDFT [µm] ISO 19840	Rossi internal code
Urban and industrial atmospheres, production rooms with high humidity and slight air pollution	Good resistance to atmospheric and aggressive agents	C4	Low	1) Zinc phosphate epoxy primer 2) Water-based top coat with polyacrylic resins	≥ 160	**1HRAL5010 (blue)**
			Medium	1) Zinc phosphate epoxy primer 2) Water-based top coat with polyacrylic resins	≥ 180	**2HRAL5010 (blue)**
			High	1) Zinc phosphate epoxy primer 2) Water-based top coat with polyacrylic resins	≥ 240	**3HRAL5010 (blue)**
Industrial areas with high humidity, aggressive environment and coastal areas with high salinity	Excellent resistance to atmospheric and chemical agents Outdoor applications in saline environment	C5	Medium	1) Sanding 2) High-zinc epoxy primer 3) Zinc phosphate epoxy intermediate 4) Water-based top coat with polyacrylic resins	≥ 240	**2IRAL5010 (blue)** [1]
			High [2]	1) Sanding 2) High-zinc epoxy primer 3) Zinc phosphate epoxy intermediate 4) Sealing 5) Water-based top coat with polyacrylic resins	≥ 280	**2KRAL5010 (blue)** [1]
	Excellent resistance to atmospheric and chemical agents Outdoor applications in chemically aggressive environments		Medium	1) Sanding 2) High-zinc epoxy primer 3) Zinc phosphate epoxy intermediate 4) Zinc phosphate epoxy top coat	≥ 240	**2LRAL5010 (blue)** [1]
			High [2]	1) Sanding 2) High-zinc epoxy primer 3) Zinc phosphate epoxy intermediate 4) Sealing 5) Zinc phosphate epoxy top coat	≥ 280	**2YRAL5010 (blue)** [1]

[1] Available for sizes **≥ 47**.
[2] Not available on motors

NOTE: C3-High class coating cycles, specific characteristics: Bactericidal, for ATEX and FOOD environments available upon request

4.4

Storage and warehousing

Rossi gearmotors must be stored in a closed environment where they are protected from solar radiation and corrosive agents. The ambient must be sufficiently clean, dry (relative humidity < 50 %), free from excessive vibrations ($v_{eff} \leq 0{,}2$ mm/s) to avoid damage to bearings.

Ambient temperature 0 ÷ 40 °C; with peaks up to a ± 10 °C.

For different ambient conditions, contact Rossi S.p.A.

The gear units and gearmotors must be positioned according to the mounting position stated in the order and on the nameplate. **Do not stack units.**

Do not, under any circumstances, loosen the closed plugs or activate the drain plug before commissioning.

For storage periods of 12 to 24 months, we recommend requesting the "Long term storage" option, which provides:

- supply of the gearbox without oil filling;
- protection of the internal volume of the gearbox by applying VCI lubricant;
- application of a layer of special anti-corrosive oil on all unpainted external parts (shafts, feet, flanges), including galvanized components (screws, nuts, washers, eyebolts, etc.);
- application of adhesive label specific to the type of protection treatment;
- the packing with sealed VCI bag.

For longer periods please contact Rossi S.p.A.

page intentionally left blank

5

Designation

Section contents

5.1	Coding	38
5.1.1	Helical inline gearmotor designation - iC	38
5.1.2	Bevel helical gearmotor designation - iO	40
5.1.3	Design and machine side - iO	41
5.1.4	Parallel shaft helicalgearmotor designation - iP	42
5.1.5	Motor designation	43
5.1.6	Motor terminal block	43
5.1.7	Gear reducer options coding	44
5.1.8	Motor options coding	44
5.1.9	Helical inline designation examples - iC	45
5.1.10	Bevel helical designation examples - iO	46
5.1.11	Parallel shaft helicalgearmotor examples - iP	47
5.2	Nameplate data	48
5.2.1	Gear reducer nameplate	48
5.2.2	Motor nameplate	48

5.1

Coding

5.1.1 Helical inline gearmotor designation - iC

iC	4	7	3	FE	-	34,73	-	B3	-	F416	-	B16D / AB16BI063
Series	Frame size gear reducer	Model	Train of gears	Design	-	Transmission ratio	-	Gear reducer mounting position	-	Output [1] flange	-	Mounting position of compact motor / Motor adapter code

gear reducer

motor

iC – iFIT helical inline gearmotors

Frame size gear reducer: 2, 3, 4, 5, 6, 7, 8, 9

Model: 7

Train of gears: 2 Stages; 3 Stages

Design: PE – Foot mounted metric design; FE – Flange metric design; 66

Transmission ratio: 3,37; 4,00; ...; ...; 97

Gear reducer mounting position: B3; B6; B7; B8; V5; V6; 66

Output [1] flange: F212; F214; ...; ...; 86

Motor adapter code:

- IEC: AB12BI063; AB12BI071; ...; AB30MI200; 83
- NEMA: AB12BN056; AB12CN143; ...; AB30MN324; 84
- B12B; ...; B30M; 106

configuration with adapter and standard IEC motor

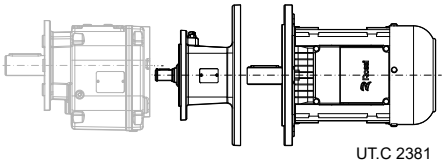

UT.C 2381

configuration with compact motor

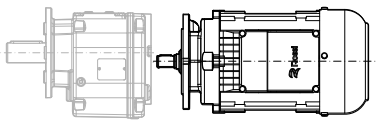

UT.C 2382

[1] field to be filled in for execution with "**FE**" flange only

page intentionally left blank

5.1.2 Bevel helical gearmotor designation - iO

iO	6	7	3	FE	- 7,28	- B3	- HD	B	- F625	B16D / AB16BI063
Series	Frame size gear reducer	Model	Train of gears	Design	Transmission ratio	Gear reducer mounting position	Output shaft	User [1] side	Output flange	Mounting position of compact motor / Motor adapter code

gear reducer — motor

iO iFIT bevel helical gearmotors

Frame size gear reducer: 3, 4, 5, 6, 7, 8, 9

Model: 7

Train of gears: 3 stages

Design:
- **PE** foot mounted metric design
- **FE** flange mounted metric design
- **SE** shaft mounted metric design

61

Transmission ratio: 5,36; 6,37; 7,28; ... 153

Gear reducer mounting position: B3, B6, B7, B8, V5, V6 — 61

Output shaft:
- **S** solid
- **SS** double extension
- **H** hollow with keyway
- **HB** hollow with shrink disc
- **HD** stepped hollow with shrink disc

39

User [1] side: A, B

Output flange:
- F316, F214, ... — 77 78
- FB14 [2] — 88

Mounting position of compact motor / Motor adapter code:
- IEC: AB12BI063, AB12BI071, ..., AB30MI200 — 74
- NEMA: AB12BN056, AB12CN143, ..., AB30MN324 — 75
- B12B, ..., B30M — 160

configuration with adapter and standard IEC motor

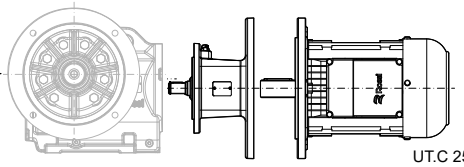

UT.C 2534

configuration with compact motor

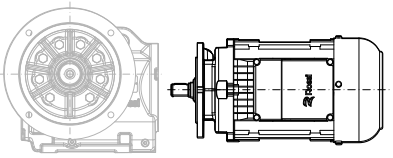

UT.C 2535

[1] field not to be filled in for **"PE"** and **"SE"** designs with **"H"** or **"SS"** shafts
[2] for designs **"FE"** with shafts **"H"** or **"HB "** or **"HD "**, **only**

5.1.3 Design and machine side iO

	Flange mounted design	Foot mounted design	Shaft mounted design
Solid shaft	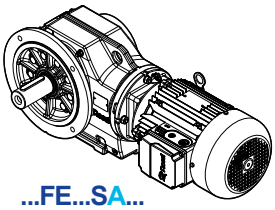 ...FE...SA... 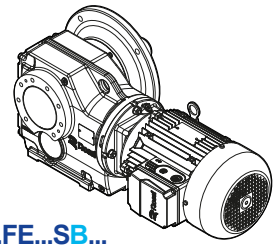 ...FE...SB...	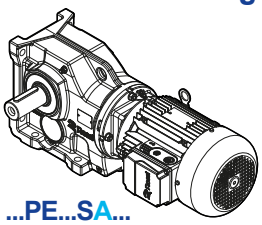 ...PE...SA... 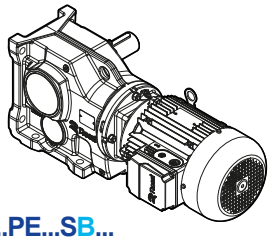 ...PE...SB...	–
Double extension shaft	–	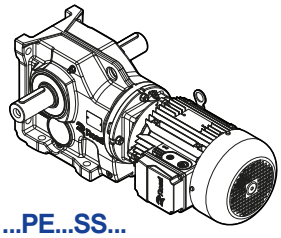 ...PE...SS...	–
Hollow shaft	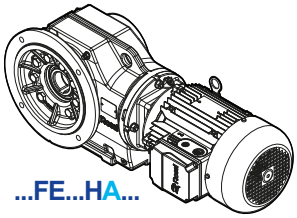 ...FE...HA... 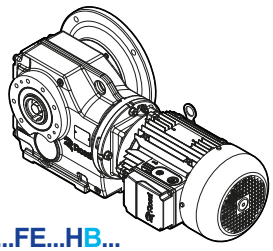 ...FE...HB...	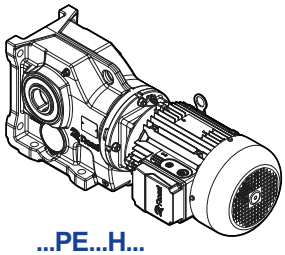 ...PE...H...	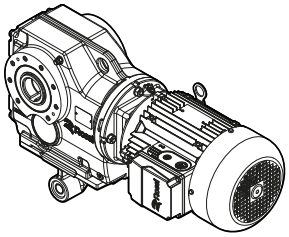 ...SE...H...
Hollow shaft with shrink disc	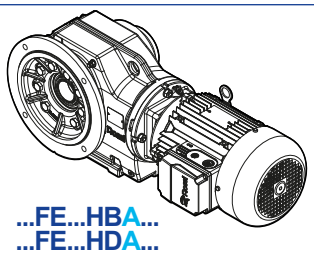 ...FE...HBA... ...FE...HDA... 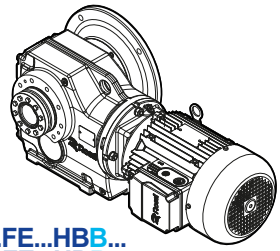 ...FE...HBB... ...FE...HDB...	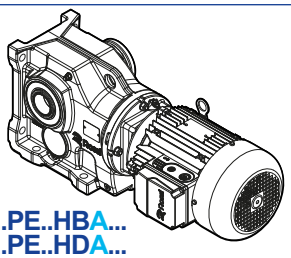 ...PE..HBA... ...PE..HDA... 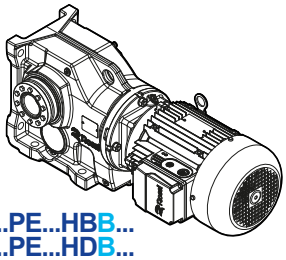 ...PE...HBB... ...PE...HDB...	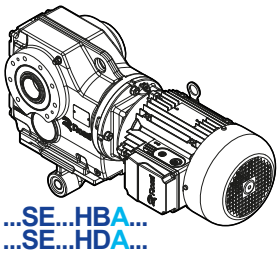 ...SE...HBA... ...SE...HDA... 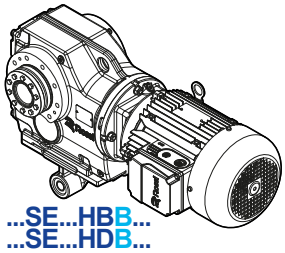 ...SE...HBB... ...SE...HDB...

UT.C 2536

5.1.4 Parallel shaft helical gearmotors - iP

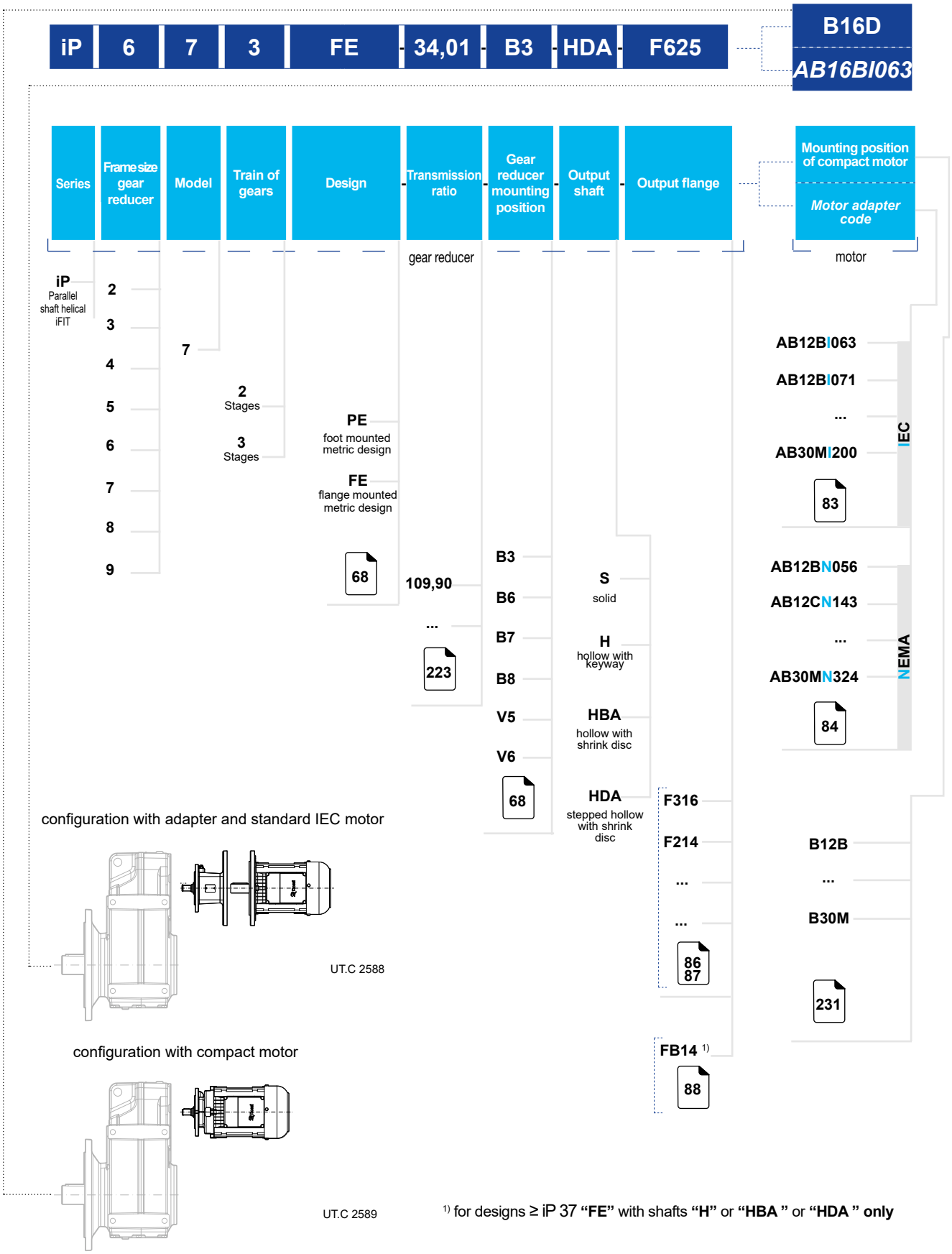

1) for designs ≥ iP 37 **"FE"** with shafts **"H"** or **"HBA"** or **"HDA"** only

5.1.5 Motor designation

HB	3	Z	90S	-	4	230.400	50	-	B16D	-	TB2 [1]
Series	Energy class	Integrated brake	Motor size	-	N. poles	Supply voltage	Frequency	-	Motor mounting position: compact / IEC	-	Terminal box position
HB	2 efficiency IE2 3 efficiency IE3	- Z	63A 63B 71B ...		2 4 6	230.400 400 ...	50 60		B12B ... B30C B5		TB1 TB2 TB3
	282	285	282		282	282	282		106 172 231		

5.1.6 Motor terminal block

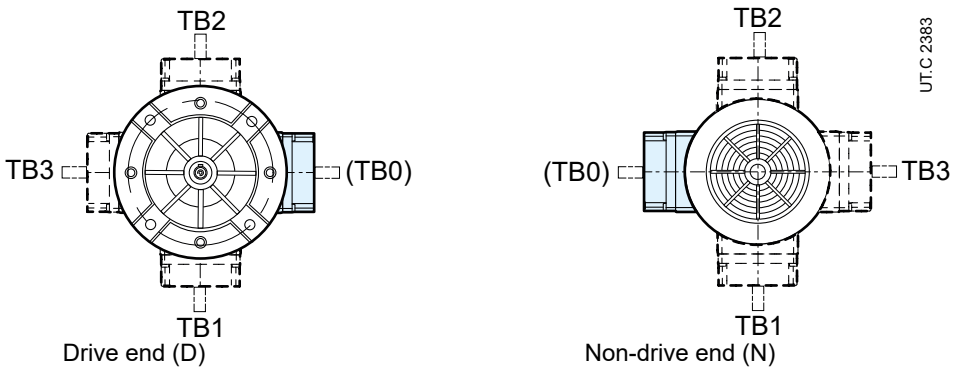

The designation is to be completed with the statement of motor terminal box position if differing from the standard one TB0 (see also pages 71, 72 for helical inline iC, pages 73, 74, 75 for bevel helical iO and 76, 77 for parallel shaft helical iP). The release lever (for brake motor) follows the position of the terminal box.

The cable entry is the responsibility of the Buyer: the terminal box is integral with housing with knockout cable openings on both sides (one for power cable and one for auxiliary equipment).

[1] For standard terminal box position TB0, no indication in motor designation is necessary.

5.1.7 Gear reducer options coding

Ref.	Description	Code	Gearmotor size		
			iC	iO	iP
(1)	Strengthened low speed shaft bearings	SP2	≥ iC 47...	≥ iO 473 H, HB, HD	≥ iP 47...H, HBA, HDA
(2)	Low speed shaft double seal (only for design with flange)	DT2	≥ iC 37...FE	≥ iO 473 FE...S	≥ iP 47...FE...S
(3)	Seal rings (gear reducer and motor) in fluoro rubber	TV2	all	all	all
(4)	Special painting cycle (gear reducer and motor)	page 33	all	all	all
(5)	Reduced backlash	GR	page 32	page 32	≥ iP 37...
(6)	Universal mounting position	BX	all	all	all
(7)	Stainless steel nameplate (gear reducer and motor)	NP316	all	all	all
(9)	Prearranged for "long-term storage"	LS	all	all	all
(10)	Terminal box position differing from TB0	TB1, TB2, TB3	all	all	all
(11)	Torque arm	TA	–	SE	–
(12)	Hollow low speed shaft washer	R	–	H	H
(13)	Rubber buffer for shaft mounting design	RBF	–	–	PE...H, HBA, HDA

5.1.8 Motor options coding

Ref.	Description	Code	HB	HBZ
(1)	Special motor supply	–	✓	✓
(3)	Motor insulation class H	,H	✓	✓
(8)	Condensate drain holes	,CD	✓	✓
(9)	Additional windings impregnation	,SP	✓	✓
(13)	Anti-condensation heater	,S	✓	✓
(16)	Second shaft end	,AA	✓	✓
(17)	Axial independent cooling fan	,V ...	✓	✓
(18)	Axial independent cooling fan and encoder	,V ... ,E...	✓	✓
(19)	Thermistor type thermal probes (PTC)	,T15 ,T17	✓	✓
(20)	Bi-metal thermal probes	,B15 ,B17	✓	✓
(21)	Drip-proof cover	,PP	✓	✓
(25)	Manual release lever position different from standard position (L)	,L1 ,L2 ,L3	–	✓
(26)	D.c. brake separate supply	…	–	✓
(35)	Light alloy fan	,VL	✓	✓
(36)	Encoder	,E1 ... ,E5	✓	✓
(42)	Motor certified to UL	,UL	✓	✓
(47)	Design for damp and corrosive environment,	,UC	–	✓
	stainless steel bolts and screws of brake disk	,DB	–	✓
(48)	IP 56 protection	,IP 56	–	✓
(49)	IP 65 protection	,IP 65	–	✓
(51)	Strengthened design for supply from inverter (sizes 160 ... 200)	,IR	✓	✓
(61)	Manual rotation	,MM	–	✓
(62)	Prearranged for encoder	,PE	✓	✓
(63)	Axial independent cooling fan and prearranged for encoder	,V... ,PE	✓	✓
(64)	IP 66 protection	,IP 66	✓	–

For a complete motor options description see cat. TX motors of series HB.

5.1.9 Helical inline designation examples - iC

Example 1: compact gearmotor

iC	4	7	3	FE	-	34,73	-	B3	-	F416	-	B16D

- helical inline gearmotor size iC 47
- 3 reduction stages
- design with flange
- metric shaft
- transmission ratio 34,73
- gear reducer mounting position B3
- output flange F416
- compact motor with mounting position B16D

Compact motor designation compatible with above coded gear reducer follows

HB	3	Z	90S	-	4	230.400	50	-	B16D	-	TB0

- motor type HB, with efficiency IE3, brake type
- motor size 90S
- number of poles 4
- supply voltage 230-400 V at 50 Hz
- compact motor with mounting position B16D
- terminal box position TB0

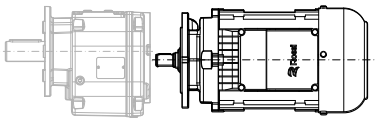

UT.C 2382

Example 2: gearmotor with IEC adapter

iC	4	7	3	FE	-	34,73	-	B3	-	F416	-	AB16DI090

- helical inline gearmotor size iC 47
- 3 reduction stages
- design with flange
- metric shaft
- transmission ratio 34,73
- gear reducer mounting position B3
- output flange F416
- standard IEC motor with adapter AB16DI090

IEC motor designation compatible with above coded gear reducer follows

HB	3	Z	90S	-	4	230.400	50	-	B5	-	TB0

- motor type HB, with efficiency IE3, brake type
- motor size 90S
- number of poles 4
- supply voltage 230-400 V at 50 Hz
- IEC motor mounting position TB2
- terminal box position TB0

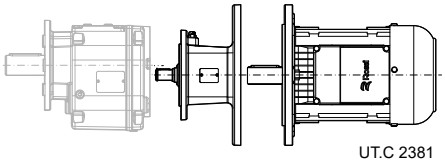

UT.C 2381

5.1.10 Bevel helical designation examples - iO

Example 1: bevel helical gearmotor

iO	5	7	3	FE	-	19,34	-	B3	-	SA	-	F525	-	B16D

- bevel helical gearmotor size iO 57
- 3 reduction stages
- design with flange
- metric shaft
- transmission ratio 19,34
- gear reducer mounting position B3
- solid low speed shaft S in A position
- output flange F525
- compact motor with mounting position B16D

Compact motor designation compatible with above coded gear reducer follows

HB	3	Z	90S	-	4	230.400	50	-	B16D	-	TB0

- motor type HB, with efficiency IE3, brake type
- motor size 90S
- number of poles 4
- supply voltage 230-400 V at 50 Hz
- compact motor with mounting position B16D
- terminal box position TB0

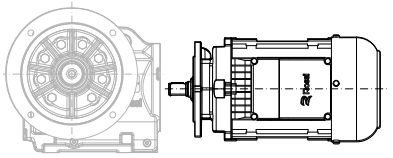

UT.C 2535

Example 2: bevel helical gearmotor with IEC adapter

iO	4	7	3	SE	-	19,58	-	B3	-	HBB	-	AB16DI090

- bevel helical gearmotor size iO 47
- 3 reduction stages
- esecuzione pendolare
- metric shaft
- transmission ratio 19,58
- gear reducer mounting position B3
- hollow low speed shaft with shrink disc HB in B position
- standard IEC motor with adapter AB16DI090

IEC motor designation compatible with above coded gear reducer follows

HB	3	Z	90S	-	4	230.400	50	-	B5	-	TB0

- motor type HB, with efficiency IE3, brake type
- motor size 90S
- number of poles 4
- supply voltage 230-400 V at 50 Hz
- IEC motor mounting position TB2
- terminal box position TB0

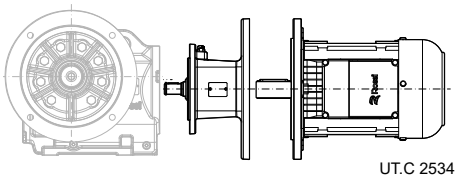

UT.C 2534

5.1.11 Parallel shaft helical designation examples - iP

Example 1: Parallel shaft helical gearmotor

iP	5	7	3	PE	-	38,21	-	B3	-	S	-	B16D

- parallel shaft helical gearmotor size iP 57
- 3 reduction stages
- foot mounted design
- metric shaft
- transmission ratio 19,34
- gear reducer mounting position B3
- solid low speed shaft S
- compact motor with mounting position B16D

Compact motor designation compatible with above coded gear reducer follows

HB	3	Z	90S	-	4	230.400	50	-	B16D	-	TB2

- motor type HB, with efficiency IE3, brake type
- motor size 90S
- number of poles 4
- supply voltage 230-400 V at 50 Hz
- compact motor with mounting position B16D
- terminal box position TB2

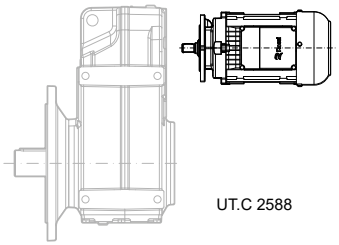

Example 2: Parallel shaft helical gearmotor with IEC adapter

iP	4	7	2	FE	-	8,96	-	B3	-	HBA	-	F525	AB16DI090

- parallel shaft helical gearmotor size iP 47
- 2 reduction stages
- esecuzione pendolare
- metric shaft
- transmission ratio 8,96
- gear reducer mounting position B3
- hollow low speed shaft with shrink disc HBA
- standard IEC motor with adapter AB16DI090
- output flange F525

IEC motor designation compatible with above coded gear reducer follows

HB	3	Z	90S	-	4	230.400	50	-	B5	-	TB0

- motor type HB, with efficiency IE3, brake type
- motor size 90S
- number of poles 4
- supply voltage 230-400 V at 50 Hz
- IEC motor mounting position TB2
- terminal box position TB0

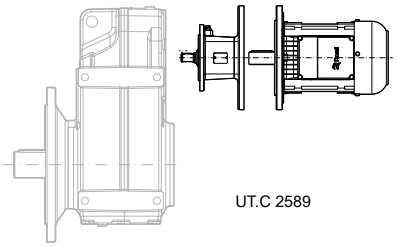

5.2

Nameplate data

5.2.1 Gear reducer nameplate

Every gear reducer is provided with a name plate in anodized aluminium containing main informations necessary for a correct identification of the product.
The name plate must not be removed and must be kept integral and readable.
All name plate data must be specified on eventual spare part orders.

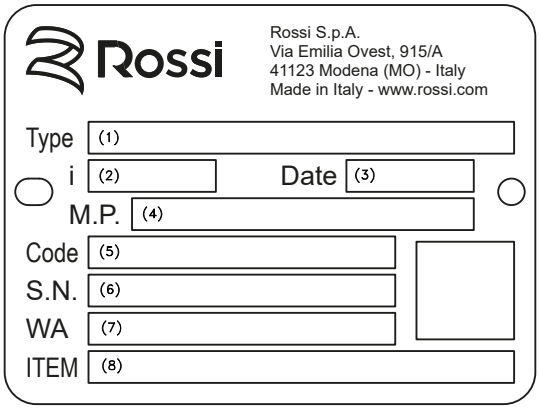

(1) Gear reducer type
(2) Transmission ratio
(3) Production date
(4) Gear reducer mounting position
(5) Product code
(6) Serial number
(7) Production batch
(8) Customer code [1]

5.2.2 Motor nameplate

The motor is provided with a nameplate in anodized aluminium containing main information necessary for a correct identification of the project.
The name plate must not be removed and must be kept integral and readable.
All name plate data must be specified on eventual spare part orders.

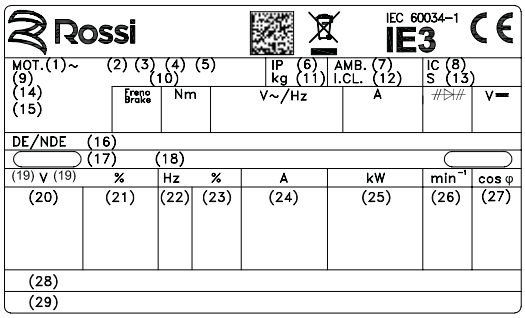

HB

(1) Number of phases
(2) Motor type
(3) Frame size
(4) Number of poles
(5) Mounting position designation position
(6) Protection IP
(7) Ambient temperature maximum
(8) IC code
(9) Production batch
(10) Two months, year of manufacturing and serial number
(11) Motor mass
(12) Insulation class I.CL.
(13) Duty cycle S...
(14) Motor code
(15) Customer code [1]
(16) Bearings
(17) Additional note
(18) Additional note
(19) Connection of the phases
(20) Rated voltage
(21) Voltage tolerance
(22) Nominal frequency
(23) Frequency tolerance
(24) Nominal current
(25) Nominal power
(26) Rated speed
(27) Nominal power factor
(28) Nominal efficiency IEC 60034-2-1
(29) Design - code

[1] On request

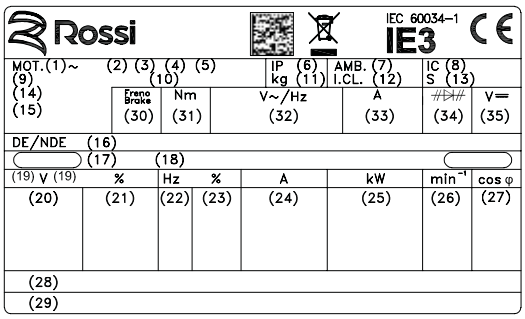

HBZ

(1) On request

(1) Number of phases
(2) Motor type
(3) Frame size
(4) Number of poles
(5) Mounting position designation position
(6) Protection IP
(7) Ambient temperature maximum
(8) IC code
(9) Production batch
(10) Two months, year of manufacturing and serial number
(11) Motor mass
(12) Insulation class I.CL.
(13) Duty cycle S...
(14) Motor code
(15) Customer code (1)
(16) Bearings
(17) Additional note
(18) Additional note
(19) Connection of the phases
(20) Rated voltage
(21) Voltage tolerance
(22) Nominal frequency
(23) Frequency tolerance
(24) Nominal current
(25) Nominal power
(26) Rated speed
(27) Nominal power factor
(28) Nominal efficiency IEC 60034-2-1
(29) Design - code
(30) Brake size
(31) Braking torque
(32) Supply of rectifier
(33) Current absorbed by brake
(34) Nominal d.c. voltage supply of brake
(35) Nominal d.c. voltage of brake supply

6

Project Planning

Section contents

6.1	Selection	52
6.1.1	Selection data	52
6.1.2	Gearmotor size selection	52
6.1.3	Verifications	53
6.1.4	Start and stop overloads	53
6.1.5	Operation with brake motor	54
6.1.6	Considerations on motor power	54
6.2	Service factor fs	55
6.3	Efficiency	56
6.4	Thermal power Pt	57
6.5	Radial loads on low speed shaft end	60
6.5.1	General	60
6.5.2	Determination of applied radial load	60
6.5.3	Permissible radial load	60
6.5.4	Permissible axial load	61
6.5.5	Radial load not in center line	61
6.6	Directions of rotation of iO low speed shaft	63

6.1

Selection

6.1.1 Selection data

For a correct selection of gearmotor and drive, the following information about the application is required

Symbols	Description	Unit of Measure SI
n_{2min}	minimum rotation speed required on low speed shaft	[min^{-1}]
n_{2max}	maximum rotation speed required on low speed shaft	[min^{-1}]
$P_{2-n2\,min}$	power required at low speed shaft at minimum speed	[kW]
$P_{2-n2\,max}$	power required at low speed shaft at maximum speed	[kW]
$M_{2-n2\,min}$	torque required at low speed shaft at minimum speed	[N m]
$M_{2-n2\,max}$	torque required at low speed shaft at maximum speed	[N m]
F_{a2}	axial loads on low speed shaft	[N]
F_{r2}	radial loads on low speed shaft	[N]
J	external moment of inertia of mass (couplings, driven machine)	[kg m^2]
T_{amb}	(maximum and minimum) ambient temperature	[°C]
H	installation altitude	[m]
S1, S2,..	duty cycle	[%]
z	number of starts per hour	[start/h]
f	supply frequency	[Hz]
U_{mot}	motor supply voltage	[V]
U_f	brake supply voltage	[V]
M_f	braking torque	[N m]
B3 ... V6	gearmotor mounting position	

6.1.2 Selection of gearmotor size

In order to select the most suitable gearmotor size for the application, you must:

1 have the necessary data as indicated in the previous paragraph:
- power P_2 required at gearmotor output;
- angular speed n_2,
- operating conditions (nature of the load, duration, frequency of starting z, other considerations).

2 determine service factor *fs* on the basis of running conditions (page 56).

3 select the gearmotor size on the basis of:
- n_2
- *fs*
- power P_1 equal or greater than P_2

If power P_2 required is the result of a precise calculation, the gearmotor should be selected on the basis of a power P_1 equal or greater than P_2 / η , where η = 0,96 ÷ 0,97 is gear reducer efficiency (page 56).

When for reasons of motor standardization, power P_1 available in catalog is much greater than the power P_2 required, the gearmotor can be selected on the basis of a lower service factor provided it is certain that this excess power available will never be required and frequency of starting z is low enough not to affect service factor (page 56).
Calculations can also be made on the basis of torque instead of power; this method is even preferable for low n_2 values.

6.1.3 Verifications

- Verify possible radial load F_{r2} referring to directions given on pages 60 and 61.
- For the motor, verify frequency of starting z when higher than that normally permissible, referring to directions and values given in ch. 2 cat. TX; this will normally be required for brake motors only.
- When a load chart is available, and/or there are overloads – due to starting on full load (especially with high inertias and low transmission ratios), braking, shocks, gear reducers in which the low speed shaft becomes driving member due to driven machine inertia, applied power higher than strictly required, other static or dynamic causes - verify that the maximum torque peak is always smaller than $\boldsymbol{1,6 \cdot M_{N2}}$ (where $M_{N2} = M_2 \cdot fs$).
  If higher or if it cannot be evaluated in the above cases, install safety devices so that $\boldsymbol{1,6 \cdot M_{N2}}$ will never be exceeded.

6.1.4 Start and stop overloads

Starting torque

When starting on full load (especially for high inertias and low transmission ratios) verify that starting torque $M_{2\ starting}$ is:

$$M_{2\ starting} = \left(\frac{M_{starting}}{M_N} \cdot M_{2\ available} - M_{2\ required} \right) \cdot \frac{J_1}{J_1 + J_0} + M_{2\ required} < 1,6 \cdot M_{N2}$$

where

- $M_{2\ required}$ is the torque absorbed by the machine through work and frictions;
- $M_{2\ available}$ is the output torque due to motor nominal power;
- J_0 is the moment of inertia (of mass) of the motor;
- J_1 is the external moment of inertia (of mass) in kg m^2 (gear reducers, couplings, driven machine) referred to the motor shaft $J_1 = J / i^2$.

When seeking to verify that starting torque is sufficiently high for starting, take into account starting friction, if any, in evaluating M_2 required.

Braking torque

In case of **stopping machines with high kinetic energy** (high moments of inertia combined with high speeds) and **with brake motors**, verify braking stress by means of the formula

$$\left(\frac{M_f}{\eta} \cdot i + M_{2\ required} \right) \cdot \frac{J_1}{J_1 + J_0} + M_{2\ required} < 1,6 \cdot M_{N2}$$

where

- M_f is the braking torque setting (see table on page 288)
- η is the efficiency
- i is the transmission ratio
- J_0 is the moment of inertia (of mass) of the motor;
- J_1 is the external moment of inertia (of mass) in kg m^2 (gear reducers, couplings, driven machine) referred to the motor shaft $J_1 = J / i^2$.

Attention:
Where no evaluation is possible, install safety devices which will keep values within $M_{2\ max} = 1,6 \cdot M_{N2}$

6.1.5 Operation with brake motor

Starting time t_a and revolutions of motor φ_{a1}

$$t_a = \frac{(J_0 + J_1) \cdot n_1}{9.55 \cdot \left(M_{starting} - \frac{M_{2\,required}}{i}\right)} \quad [s] \qquad \varphi_{a1} = \frac{t_a \cdot n_1}{19.1} \quad [rad]$$

Braking time t_f and revolutions of motor φ_{f1}

$$t_f = \frac{(J_0 + J_1) \cdot n_1}{9.55 \cdot \left(M_f + \frac{M_{2\,required}}{i}\right)} \quad [s] \qquad \varphi_{f1} = \frac{t_f \cdot n_1}{19.1} \quad [rad]$$

where:

- $M_{starting}$ is the motor starting torque $\left(\frac{9550 \cdot P_1}{n_1} \cdot \frac{M_{starting}}{M_N}\right)$
- M_f is the braking torque setting of the motor (see page 288)
- φ_{a1} is the revolution of motor during starting time t_a (see page 288)
- φ_{f1} is the revolution of motor during braking time t_f (see page 288)
- J_0 is the moment of inertia (of mass) of the motor;
- J_1 is the external moment of inertia (of mass) in kg m^2 (gear reducers, couplings, driven machine) referred to the motor shaft.

For other symbols, see page 20 and table on page 52.

Assuming a regular air-gap and ambient humidity, and utilizing suitable electrical equipment, repetition of the braking action, as affected by variation in temperature of the brake and by the state of wear of friction surface, is approx $0{,}1 \cdot \varphi_{f1}$.

6.1.6 Considerations on motor power

Taking into account the efficiency of the gear reducer, and other drives – if any – **motor power** is to be as near as possible to the power rating required by the driven machine: accurate calculation is therefore recommended.

The power required by the machine can be calculated, taking into account its components:

- power due to the work to be done,
- power required to overcome friction (first detachment, sliding or rolling)
- power required to overcome inertia (especially when the mass and/or acceleration or deceleration is large);

or determined experimentally based on tests and comparisons with existing applications, amperometric and wattmetric readings.

Oversizing the motor involves:

- higher starting current and therefore larger fuse valves and conductor section;
- a higher operating cost as it worsens the power factor (cos φ) and also the efficiency;
- greater stress on the drive, causing danger of mechanical failure, drive being normally proportionate to the power rating required by the machine, not to motor power.

Only high values of ambient temperature, altitude, frequency of starting or other particular conditions require an increase in motor power.

Service factor *fs* takes into account the different running conditions which the gearmotor must be referred to:

- nature of load;
- duration;
- frequency of starting;

and other consideration to be considered in the calculations of gear reducer selection and verification.
For a quick and rough selection, the following table gives the minimum service factor *fs* required according to the kind of the driven machine.

Load classification		Driven machine	*fs* ≥
I	**Uniform load** ($m_J \leq 0,3$)	Fans (small diameters) Agitators (liquids at low and constant density) Mixers (low density and uniform materials) Belt conveyors (fine grade loose materials) Auxiliary commands Assembly lines Filling machines Compressors Centrifugal pumps (liquids with low and constant density) Elevators Escalations	**1**
II	**Moderate overloads** ($m_J \leq 3$)	Fans (average diameters) Agitators (liquids, high or variable density) Mixers (variable density materials) Belt conveyors (coarse bulk materials) Translations Dosing pumps Gear pumps Multi-cylinder piston pumps Centrifugal Pumps (high or variable density liquids) Palletizers Slewing gears Palletizing equipments Bottling machines Hoists Sliding doors	**1.32**
III	**Heavy overloads** ($m_J \leq 10$)	Bucket elevators Roller ways Heavy duty mixers (solid and heterogeneous materials) Bridge crane translations Mechanisms (cranks, eccentrics) Shears (sheet metal) Bending rolls Centrifuges Presses (crank, toggle, eccentric)	**1.6**

For a more accurate calculation of the required service factor (especially considering the running hours), proceed as stated below

1) Calculate the mass acceleration factor m_J:

$$m_J = \frac{J_1}{J_0}$$

where:

- J_1 [kg m²] is the external moment of inertia J (of mass; coupling, driven machine), referred to motor shaft $J_1 = J / i^2$;
- J_0 [kg m²] is the moment of inertia (of mass) of motor (see. cat. TX) including brakes, flywheel, etc.
- i is the transmission ratio of selected gear reducer.

2) Select the proper overload class according to the acceleration mass factor m_J

$m_J \leq 0{,}3$ (uniform) **class I**
$m_J \leq 3$ (moderate overloads: ≈ 1,6 x normal) **class II**
$m_J \leq 10$ (heavy overloads: ≈ 2,5 x normal) **class III**

For m_J values higher than 10, in presence of high values of backlash for kinematic chain and/or high radial loads a specific evaluation has to be carried out: contact Rossi S.p.A.

3) From the diagram below, according to the overload class, the running time and the starting frequency *z*, read off the service factor required.

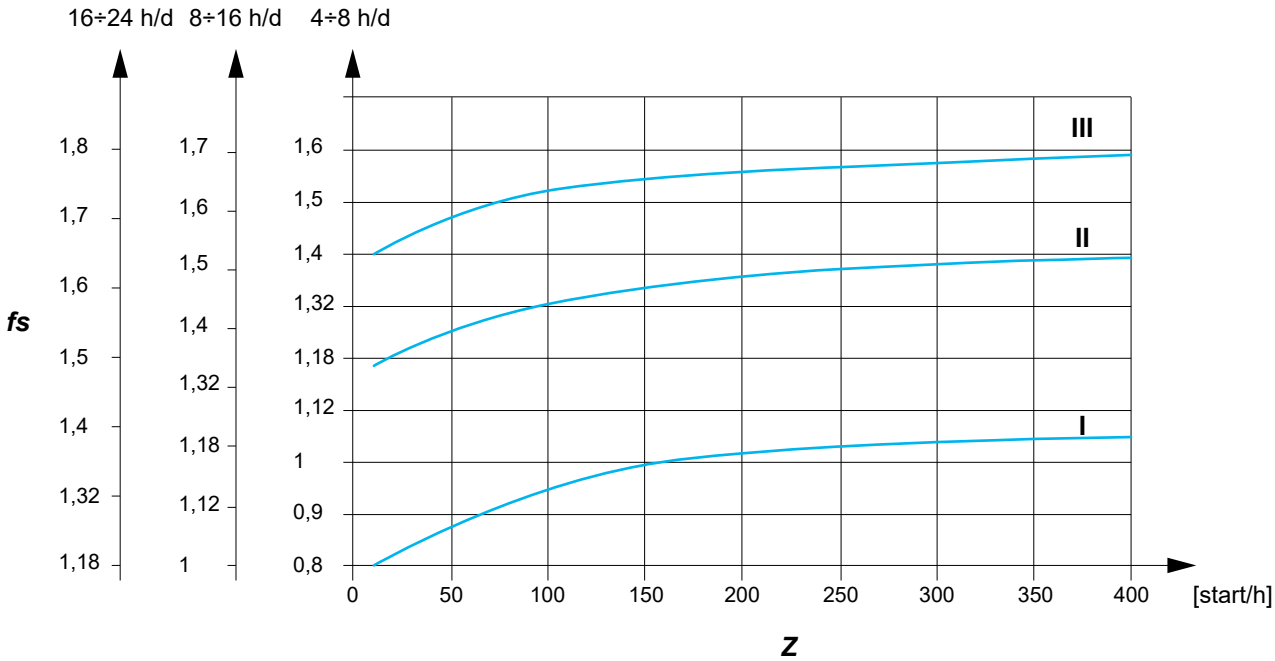

6.3 Efficiency

Gear reducer efficiency is determined by the friction of the sliding and rolling surfaces (gears, bearings and seals) and by the oil splash leakage of the lubricating oil.
The value of efficiency is influenced by operating conditions (load and speed) and can reach a maximum value up to

- maximum efficiency 0,96 (for 3 stages iC, iO and iP gear reducers)
- maximum efficiency 0,97 (for 2 stages iC and iP gear reducers).

The power loss due to efficiency is dissipated as heat flow through the outer surfaces of the gearmotor.

In order not to overheat the lubricant and seal material, **it must be ensured that the power applied does not exceed the heat dissipation capacity of the gearmotor.**

6.4 Thermal power

The nominal thermal power P_{TN} [kW] is that which can be applied at the gear reducer input, without exceeding 95 °C approximately oil temperature when operating in following running conditions:

- input speed n_1 = 1400 min^{-1} (4 poles motor, 50 Hz);
- mounting position B3;
- continuous duty *S1*;
- maximum ambient temperature 25 °C;
- maximum altitude 1000 m a.s.l.
- air speed ≥ 1,25 m/s (typical value in presence of a gearmotor with self-cooled motor)

The gearmotor combinations shown in chapters 9, 11 and 13 are already thermally verified for all of the above conditions, including 2-pole combinations.

Otherwise it is necessary to verify that the applied power P_1 is less than or equal to the gearbox rated thermal power P_{TN} (indicated in the table) multiplied by the corrective coefficients f_{T1}, f_{T2}, f_{T3}, f_{T4}, f_{T5} (indicated in the tables) that take into account the different operating conditions:

$$P_1 \leq P_{TN} \cdot f_{T1} \cdot f_{T2} \cdot f_{T3} \cdot f_{T4} \cdot f_{T5}$$

If verification is not met, evaluate the use of special lubricants or heat exchanger cooling units, contact Rossi S.p.A.

Thermal power needs not be taken into account when maximum duration of continuous running time is 1 ÷ 3 h, for all gear reducer sizes, followed by rest periods long enough to restore the gear reducer to near ambient temperature.
In case of maximum ambient temperature above 50 °C or below 0 °C, contact Rossi S.p.A.

Nominal thermal power P_{TN} **[kW]:**

	P_{TN} [kW]							
	iC 27...	**iC 37...**	**iC 47...**	**iC 57...**	**iC 67...**	**iC 77...**	**iC 87...**	**iC 97...**
2	7,5	8	10,6	12,5	15	20	28	40
3	5,3	6	8,5	9,5	11,2	15	21,2	30

	P_{TN} [kW]						
	iO 373	**iO 473**	**iO 573**	**iO 673**	**iO 773**	**iO 873**	**iO 973**
3	5,6	7,5	9	10,6	15	25	33,5

	P_{TN} [kW]							
	iP 27...	**iP 37...**	**iP 47...**	**iP 57...**	**iP 67...**	**iP 77...**	**iP 87...**	**iP 97...**
2	6,7	8,5	10,3	13,2	15,5	24,3	36,5	48,7
3	4,5	5,6	6,9	9,25	10,3	16	24,3	32,5

Thermal factor f_{T1} according to input speed n_1:

	f_{T1} n_1 [min^{-1}]					
	710	**900**	**1120**	**1400**	**1800**	**2800**
iC, iP **2** , **2**	1,18	1,12	1,06	1	0,85	0,5
iC, iP **3** , **3**	1,06	1,06	1,03	1	0,95	0,6
iO **3**						

Thermal factor f_{T2} **according to ambient temperature** and **service**

$T_{amb\ max}$ °C	f_{T2} Continuous duty **S1**	Intermittent duty **S3 ... S6** Cyclic duration factor [%] for 60 min running			
		60	**40**	**25**	**15**
60	0,5	0,6	0,67	0,8	0,85
50	0,63	0,75	0,85	1	1,06
40	0,8	0,95	1,06	1,18	1,32
30	0,95	1,12	1,25	1,4	1,6
25	1	1,18	1,32	1,5	1,7
10	1,18	1,4	1,6	1,8	2

Thermal factor f_{T3} **according to mounting position:**

Mounting position	f_{T3} **iC 272 ... iC 972 iP 272 ... iP 972**	**iC 273 ... iC 973 iP 273 ... iP 973**
V5	0,8	0,9
V6	0,71	0,8

Mounting position	f_{T3} **iO 373 ... iO 973**
B6, V5	0,9
B7, B8, V6	0,8

Thermal factor f_{T4} **according to altitude:**

Altitude	f_{T4}
≤ 1000	**1**
1000 ÷ 2000	0,95
2000 ÷ 3000	0,9
3000 ÷ 4000	0,85
≥ 4000	0,8

Thermal factor f_{T5} **according to cooling air speed on housing:**

Air speed m/s	Installation environment	f_{T5}
< 0,63	very small environment or without air movements or with protected gear reducer	[1]
0,63	very small environment and with limited air movements	0,71
1	wide environment without air movements (e.g. any presence of adapter)	0,9
1,25	wide environment with light air movements (e,g, gearmotor with self-cooled motor)	**1**
2,5	open and cooled	1,18
4	with heavy air movements	1,32

[1] Contact Rossi S.p.A.

6.5

Radial loads on low speed shaft end

6.5.1 General

Radial loads generated on the shaft end by a drive connecting gearmotor and machine must be less than or equal to those given at ch. 9, 11 and 13 as bearing life and wear (which also affects gears unfavourably) and low speed shaft strength clearly impose limits on permissible radial load.

6.5.2 Determination of the applied radial load

For the most common drives, radial load F_{r2} can be determined using the following formula where k takes on different values in relation to transmission type

$$F_{r2} = k \cdot \frac{2 \cdot M_2}{d} \quad [N]$$

where:

- M_2 [N m] is the torque required by the gearmotor low speed shaft;
- d [m] is the pitch diameter;
- k is a coefficient which assumes different values according to transmission type:
  k = 1 for chain drive (lifting in general);
  k = 1,5 for timing belt drive;
  k = 2,5 for V-belt drive;
  k = 1,1 for spur gear pair drive;
  k = 3,55 for friction wheel drive.

6.5.3 Permissible radial load

The values of permissible radial load F_{r2} are indicated in the tables of ch. 9 (for iC gearmotors), ch. 11 (for iO gearmotors) or ch. 13 (for iP gearmotors) and are valid for foot mounted gearmotor design (P…).
These values are referred to gearmotor's output speed n_2 and torque M_2,considering overhung load acting on centre line of low speed shaft end, on A side (for iO gearmotors), in the most unfavorable direction of rotation and angular position of load.

If the exact direction of rotation and angular position of load are known, an increase of permissible radial load may be achieved.
On request, the option with strengthened bearings on low speed shaft is available (see page 44).
For the verification of each specific case contact Rossi S.p.A. with the notation shown in the figure.

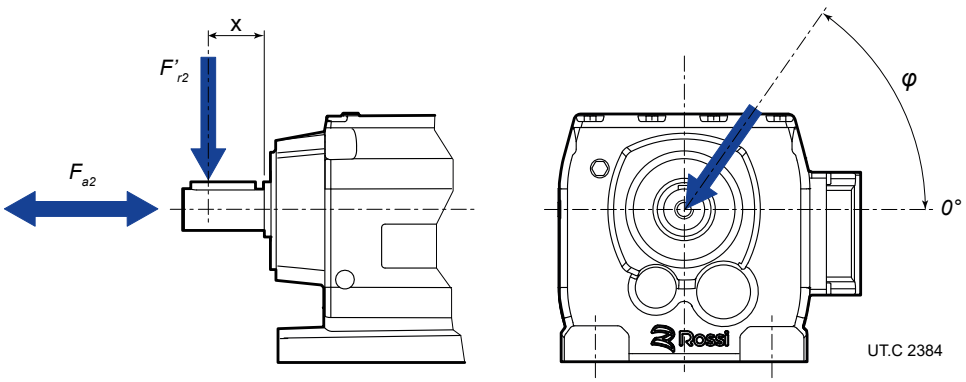

6.5.4 Permissible axial load

In absence of the radial load, an axial load may be acting on center line, not higher than 0,5 times the radial load stated in ch. 9. An **axial load** of up to 0,2 times the value in the table is permissible, simultaneously with the radial load, see ch. 9, 11 and 13.

If exceeded and/or for **misaligned axial loads**, contact Rossi S.p.A.

6.5.5 Radial load not in center line

In the case of radial load acting in a position other than the centre line, i.e. at a distance from the shoulder other than 0,5 · E, you have to recalculate the permissible radial load value at distance x (F'_{r2x}) from the value given in chap. 9, 11 and 13 using the minimum value given by the following formulae.

Solid shaft

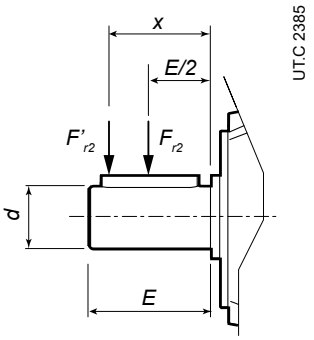

Hollow output shaft

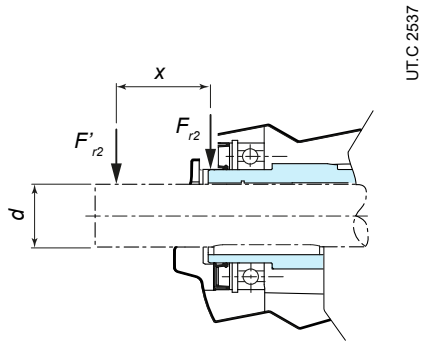

$$F'_{r2b} = F_{r2} \cdot \frac{E/2 + y}{x + y} \quad [N]$$

$$F'_{r2s} = \frac{m}{x + q} \quad [N]$$

$$F'_{r2} = min\,(F'_{r2b}\,;\,F'_{r2s}) \quad [N]$$

where

- F'_{r2b} [N] is the permissible radial load, according to bearing life, acting at the distance *x* from shaft shoulder;
- F'_{r2s} [N] is the permissible radial load, according to shaft strength, acting at the distance *x* from shaft shoulder;
- F_{r2} [N] is the permissible radial load acting on center line of gearmotor low speed shaft end (see ch. 9, 11 and 13);
- F'_{r2} [N] is the permissible radial load acting at the distance *x* from shaft shoulder;
- E [mm] is the gearmotor low speed shaft end length;
- *d* [mm] diameter of gearmotor low speed shaft end;
- *x* [mm] is the distance between the gearmotor low speed shaft shoulder and the load application point;
- *y* [mm] is a parameter that depends on the geometry of the gearmotor low speed shaft;
- *m* [N mm] is a parameter that depends on the geometry of the gearmotor low speed shaft;
- *q* [mm] is a parameter that depends on the geometry of the gearmotor low speed shaft.

Gearmotor size	*E/2 + y* mm	*y* mm	*m* N mm	*q* mm	*d* mm	*E* mm
iC 27...	106,5	81,5	155700	11,8	25	50
iC 37...	118	93	123500	0	25	50
iC 47...	137	107	243900	15	30	60
iC 57...	147,5	112,5	376300	18	35	70
iC 67...	168,5	133,5	264600	0	35	70
iC 77...	173,7	133,7	396800	0	40	80
iC 87...	216,7	166,7	845000	0	50	100
iC 97...	255,5	195,5	1060000	0	60	120

Gearmotor size	*E/2 + y* mm	*y* mm	*m* N mm	*q* mm	*d* mm	*E* mm
iO 373	123,5	98,5	130000	0	25	50
iO 473	153,5	123,5	140000	0	30	60
iO 573	169,7	134,7	270000	0	35	70
iO 673	181,3	141,3	412000	0	40	80
iO 773	215,8	165,8	769000	0	50	100
iO 873	252	192	1640000	0	60	120
iO 973	319	249	2800000	0	70	140

Gearmotor size	*E/2 + y* mm	*y* mm	*m* N mm	*q* mm	*d* mm	*E* mm
iP 27...	109,5	84,5	113000	0	25	50
iP 37...	123,5	98,5	107000	0	25	50
iP 47...	153,5	123,5	140000	0	30	60
iP 57...	170,7	135,7	270000	0	35	70
iP 67...	181,3	141,3	412000	0	40	80
iP 77...	215,8	165,8	787000	0	50	100
iP 87...	263	263	1060000	0	60	120
iP 97...	350	280	2090000	0	70	140

The table below shows when it is necessary to limit the admissible radial load.

Mounting surface	Gear units	Mounting position	Restriction
B3 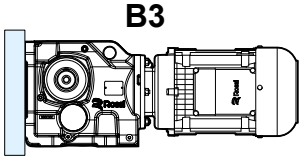	**iO 373** **...** **iO 973**	**B3**	In the case of wall mounting (as highlighted in Fig.), the admissible radial load Fr_2 specified in the selection tables is reduced by 50%.

6.6

Directions of rotation of iO low speed shaft

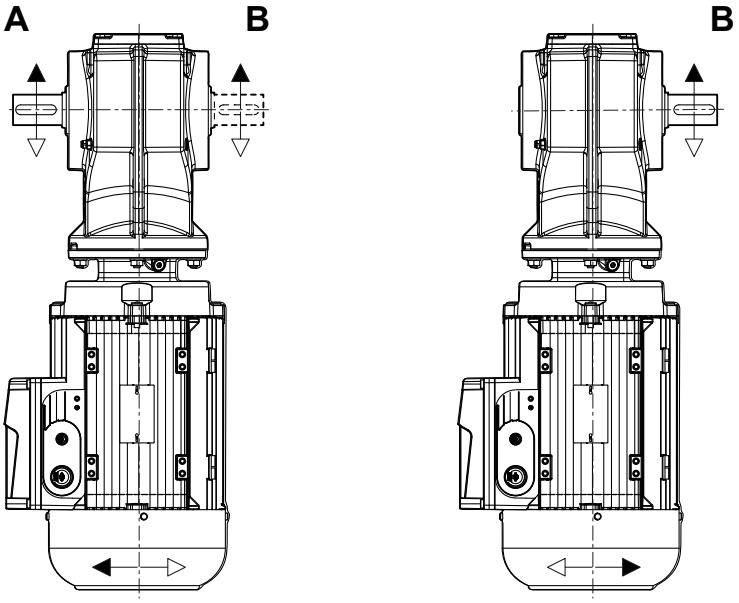

UT.C 2590

7

Mounting positions

Section contents

7.1	Mounting positions	66
7.1.1	General	66
7.1.2	Change of mounting position	69
7.1.3	Universal mounting position BX	69
7.2	Plug position	69
7.2.1	Positions of oil breather and drain plugs	69
7.2.2	Position of oil breather and drain plug of foot mounted helical inline gearmotor	71
7.2.3	Position of oil breather and drain plug of flange mounted helical inline gearmotor	72
7.2.4	Position of oil breather and drain plug of foot mounted bevel helical gearmotor	73
7.2.5	Position of oil breather and drain plug of flange mounted bevel helical gearmotor	74
7.2.6	Position of oil breather and drain plug of shaft mounted bevel helical gearmotor	75
7.2.7	Position of oil breather and drain plug of flange mounted parallel shaft helical gearmotor	76
7.2.8	Position of oil breather and drain plug of shaft mounted parallel shaft helical gearmotor	77

7.1

Mounting positions

7.1.1 General

The mounting positions below show the possible mounting positions of the different gearmotor designs by Rossi S.p.A.

Except specific needs, prefer mounting position B3 as it is the most advised from a technical and economic point of view:

- maximum simplification of lubrication system,
- less oil splash,
- less gear reducer heating;
- greater availability of stock products.

For inclined or oscillating mounting positions contact Rossi S.p.A.

HELICAL INLINE GEARMOTORS - iC

PE - foot mounted design

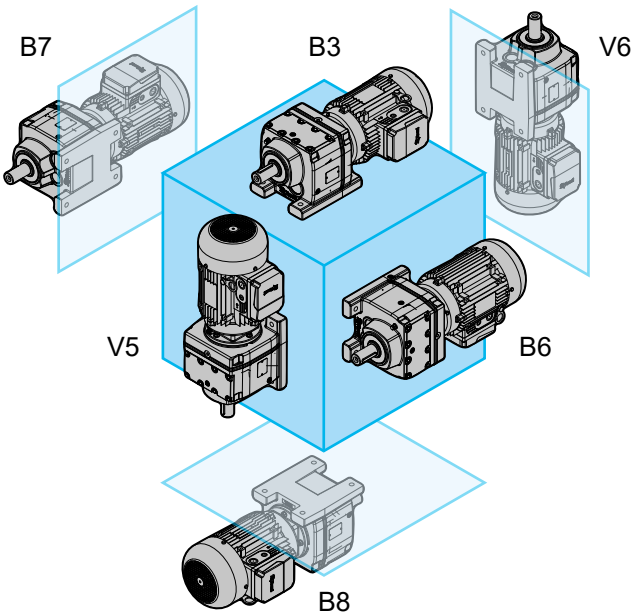

FE - flange mounted design

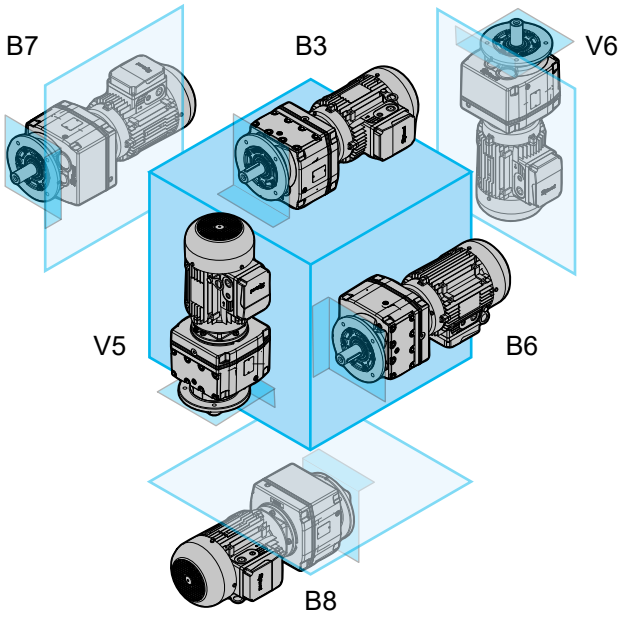

BEVEL HELICAL GEARMOTORS - iO

PE - foot mounted design

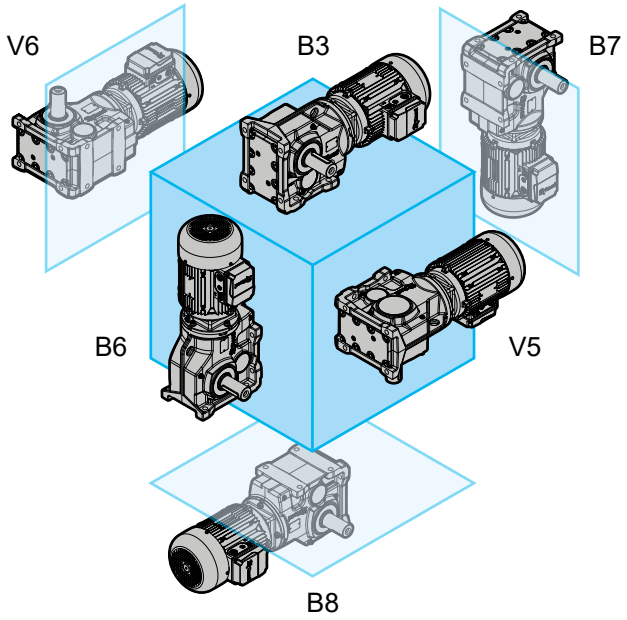

FE - flange mounted design

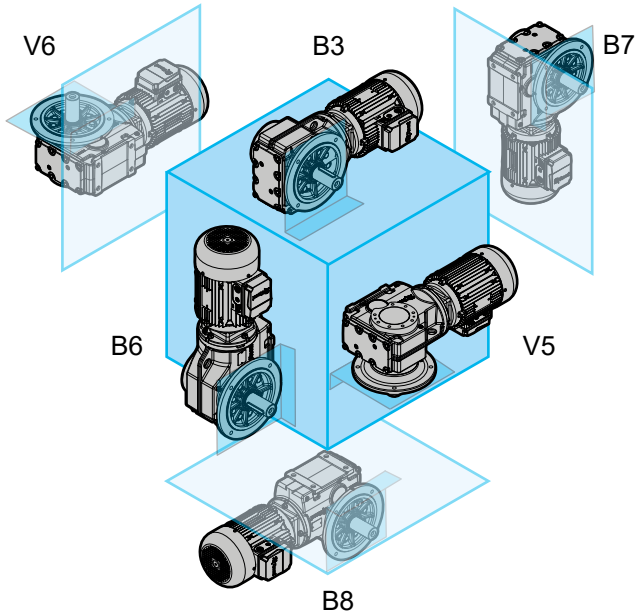

SE - shaft mounted design

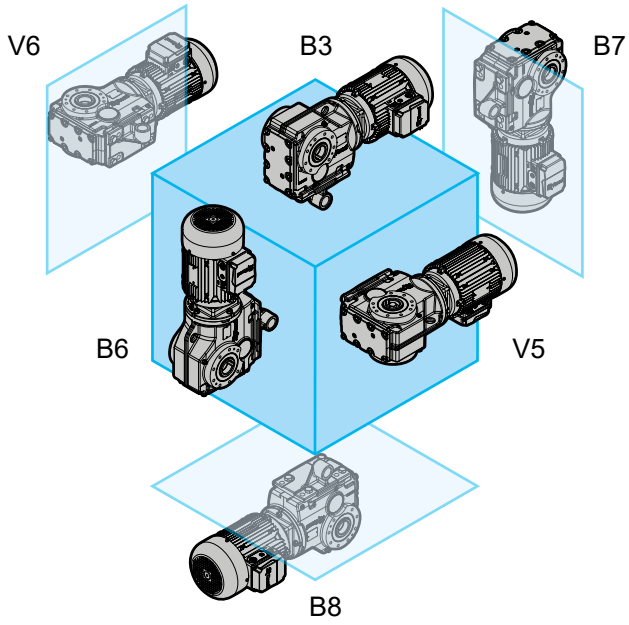

PARALLEL SHAFT HELICAL GEARMOTORS iP

PE - foot mounted design

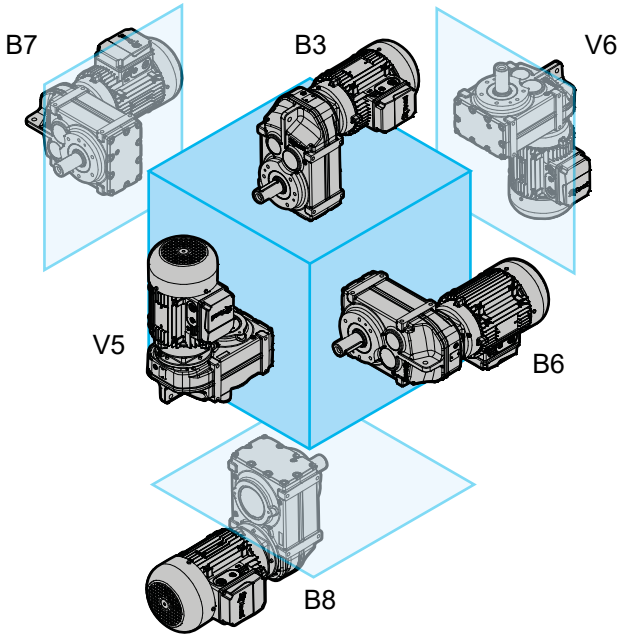

FE - flange mounted design

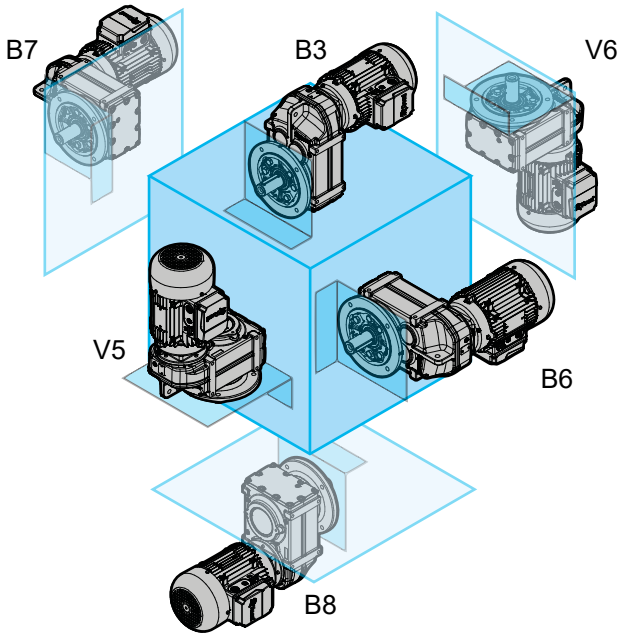

7.1.2 Change of mounting position

If gear reducer is installed in a mounting position differing from the one stated on name plate please follow these instructions:

- adjust the position of breather plug (see pages 71, 72 for helical inline iC, pages 73, 74, 75 for bevel helical iO and pages 76, 77 for parallel shaft helical iP)
- adjust lubricant quantity (see page 81) up to the oil level foreseen, checking that there are no more gas pockets in the oil which is included in the gear reducer
- for the changeover to mounting position V5 or V6 contact Rossi S.p.A.

7.1.3 Universal mounting position BX

In this mounting position the gearmotors are supplied completely full of lubricant with all closed plugs, and with a loose breather plug as standard.

Before commissioning, please follow these instructions:

- position the breather plug correctly in the position foreseen by the operation mounting position (see pages 71, 72 for helical inline iC, pages 73, 74, 75 for bevel helical iO and pages 76, 77 for parallel shaft helical iP)
- adjust oil quantity according to operation mounting position (see page 81).

7.2 Plug position

7.2.1 Positions of breather and drain plug

The position of breather and drain plug depend from gearmotor mounting position, see following pages.
Following table shows when the breather or drain plugs lay on motor flange, according to gearmotor mounting position.

Mounting position		Position of breather plug	Position of drain plug
iC, IP	iO		
B3, B6, B7, B8	B3, B8, V5, V6	in gear reducer housing	in gear reducer housing
V5	B6	in motor flange	in gear reducer housing
V6	B7	in gear reducer housing	in motor flange

When the breather plug or the drain plug are on motor flange, their angular position is determined on the basis of motor terminal box position.
All figures in this catalog represent breather and drain plugs with motor terminal box in standard TB0 position (see pages 43 and 71, 72, 73, 74, 75, 76, 77).
The exact position of the breather and drain plugs according to the position of the motor terminal box is shown on the next page.

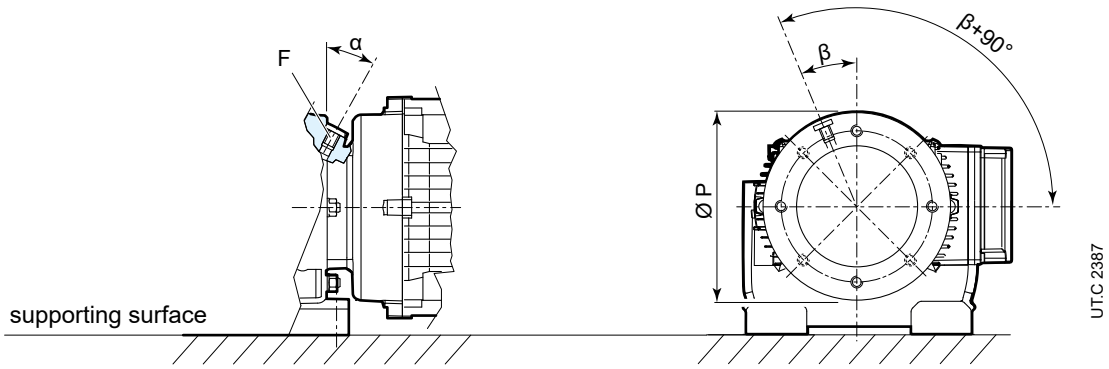

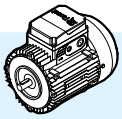	P Ø	α °	β °	F
63	120	0	45	M10x1
	160	0	45	M10x1
	200	30	22,5	M12x1,5
71	120	0	45	M10x1
	160	0	45	M10x1
	200	30	22,5	M12x1,5
80	120	15	22,5	M10x1
	160	30	22,5	M12x1,5
	200	30	22,5	M12x1,5
	250	30	22,5	M12x1,5
	300	90	22,5	M22x1,5
90	120	30	22,5	M10x1
	160	30	22,5	M10x1
	200	30	22,5	M12x1,5
	250	30	22,5	M12x1,5
	300	30	22,5	M22x1,5
100 112MA	120	30	22,5	M10x1
	160	30	22,5	M10x1
	200	30	22,5	M12x1,5
	250	30	22,5	M12x1,5
	300	30	22,5	M22x1,5
112M	160	30	22,5	M10x1
	200	30	22,5	M12x1,5
	250	30	22,5	M12x1,5
	300	30	22,5	M22x1,5
132S 132M	160	30	22,5	M10x1
	200	15	22,5	M12x1,5
	250	30	22,5	M12x1,5
	300	30	22,5	M22x1,5
132L 160	200	30	22,5	M10x1
	250	30	22,5	M12x1,5
	300	30	22,5	M22x1,5
180	250	30	22,5	M12x1,5
	300	30	22,5	M22x1,5
200	250	30	22,5	M12x1,5
	300	30	22,5	M22x1,5

7.2.2 Position of breather and drain plug of foot mounted gearmotor

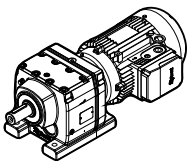

iC 27...PE / iC 97...PE

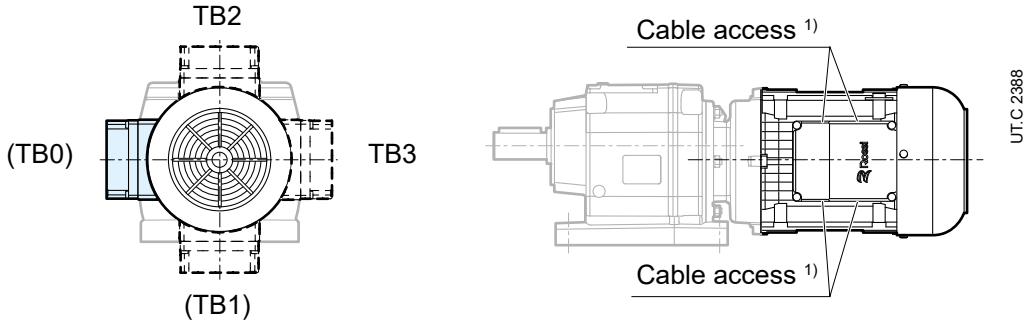

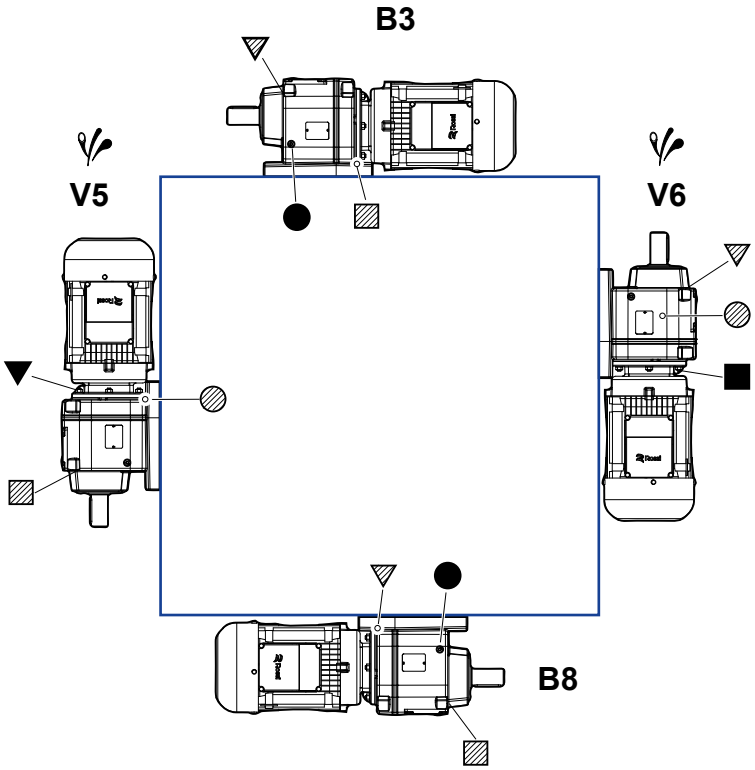

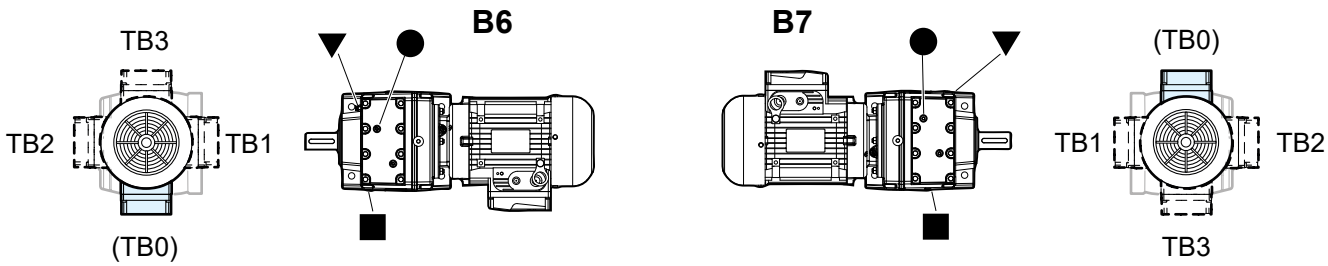

iC 27... : breather plugs not present for B3, B8, B6, B7

iC 27... : oil level and drain plugs not present

iC 47..., **iC 57**... : level plug not present for B6

- ▼ breather plug
- ● oil level plug
- ■ oil drain plug
- breather plug on opposite side (or not in view)
- oil level plug on opposite side (or not in view)
- oil drain plug on opposite side (or not in view)
- Possible high oil splash: for the corrective factor f_{t3} of nominal thermal power P_{tN} see page 57.

[1] Cable connection is by the customer: terminal box is integral with motor housing and equipped with knockout cable openings on both sides (one for power cable and one for auxiliary equipment).

7.2.3 Position of breather and drain plug of flange mounted gearmotor

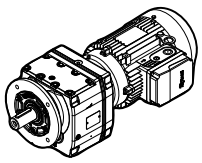

iC 27...FE / iC 97...FE

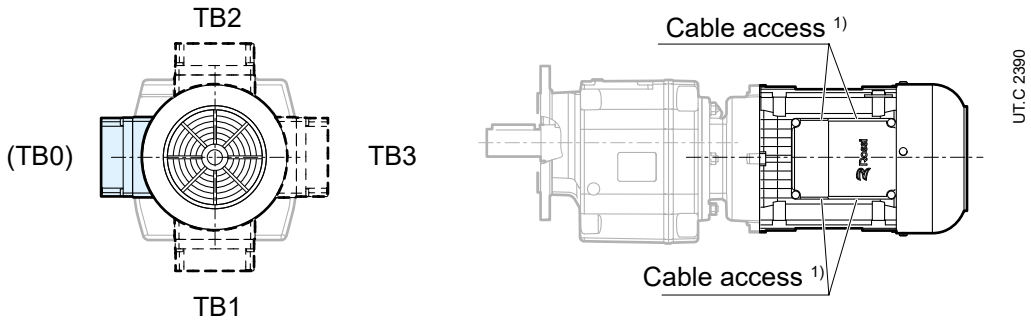

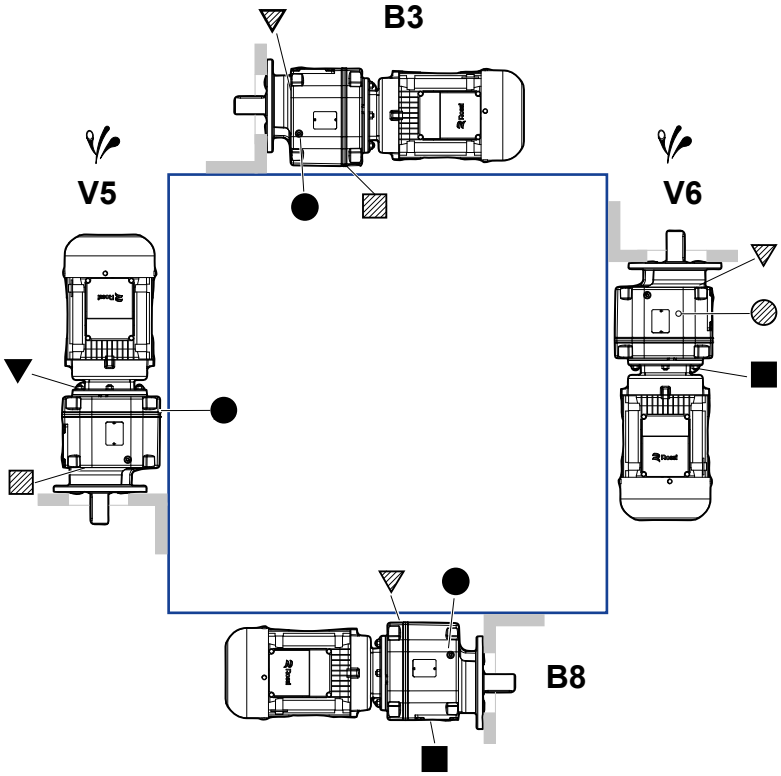

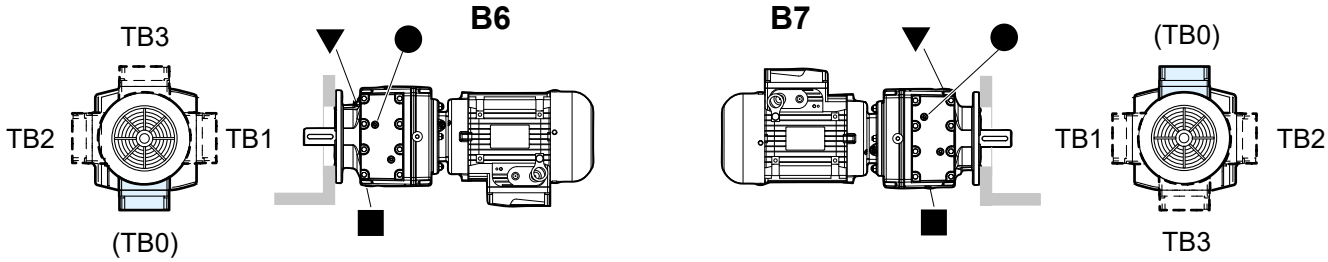

iC 27... : breather plugs not present for B3, B8, B6, B7

iC 27... : oil level and drain plugs not present

iC 47..., **iC 57**... level plug not present for B6

- ▼ breather plug
- ● oil level plug
- ■ oil drain plug
- ▽ breather plug on opposite side (or not in view)
- ◍ oil level plug on opposite side (or not in view)
- ▨ oil drain plug on opposite side (or not in view)
- Possible high oil splash: for the corrective factor f_{t3} of nominal thermal power P_{tN} see page 57.

[1] Cable connection is by the customer: terminal box is integral with motor housing and equipped with knockout cable openings on both sides (one for power cable and one for auxiliary equipment).

7.2.4 Position of breather and drain plug of foot mounted bevel helical gearmotor

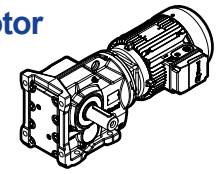

iO 373 PE / iO 973 PE

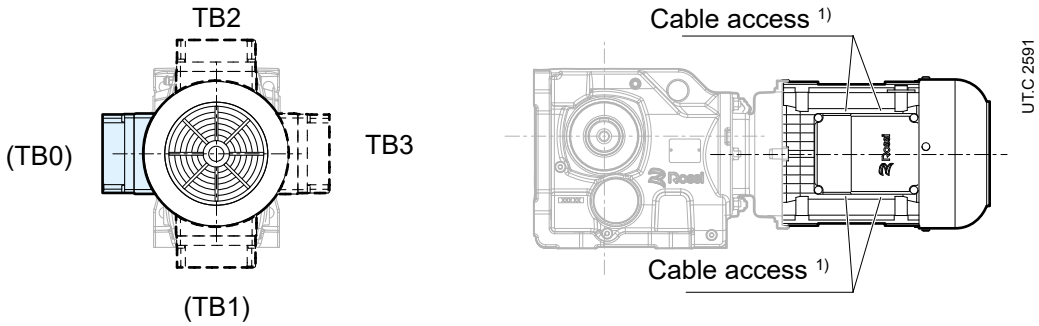

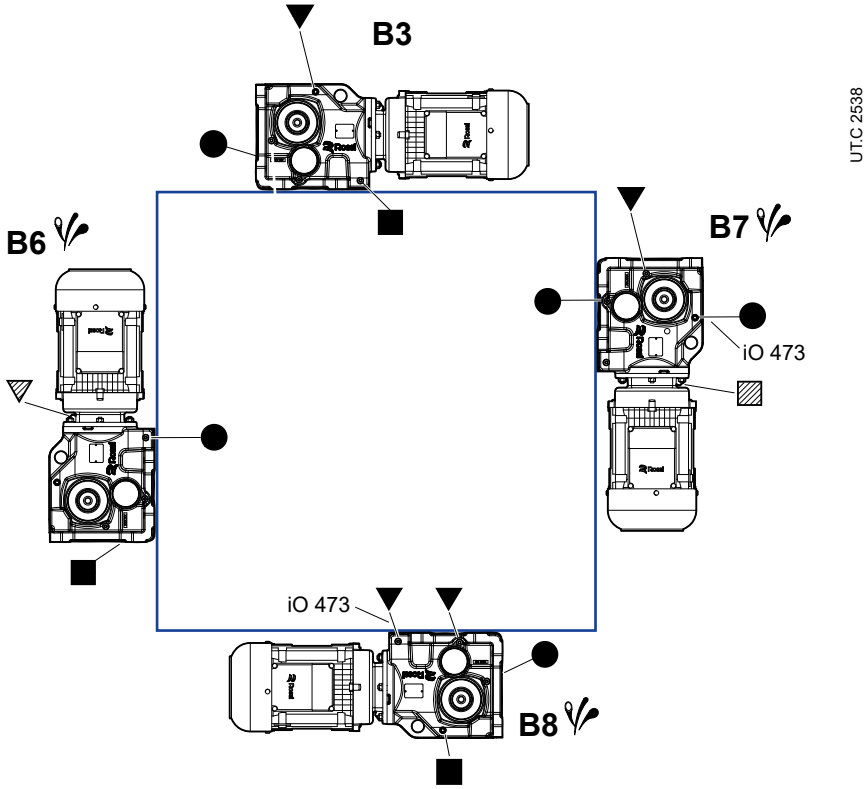

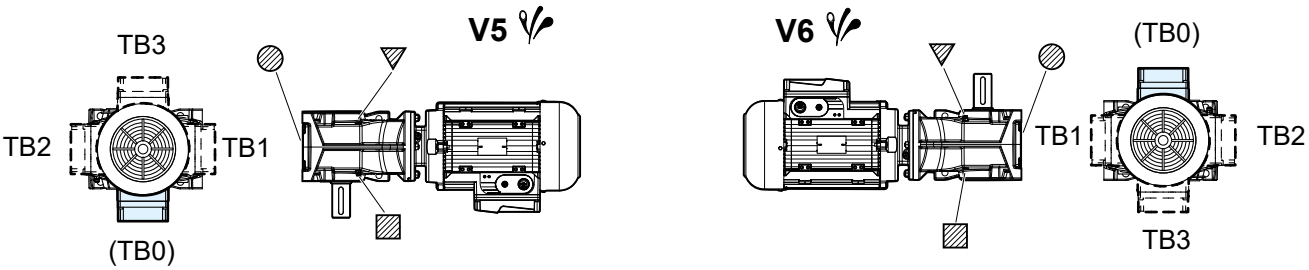

▼ breather plug	▽ breather plug on opposite side (or not in view)	Possible high oil splash: for the corrective factor f_{t3} of nominal thermal power P_{tN} see page 57.
● oil level plug	◍ oil level plug on opposite side (or not in view)	
■ oil drain plug	▨ oil drain plug on opposite side (or not in view)	

[1] Cable connection is by the customer: terminal box is integral with motor housing and equipped with knockout cable openings on both sides (one for power cable and one for auxiliary equipment).

7.2.5 Position of breather and drain plug of flange mounted bevel helical gearmotor

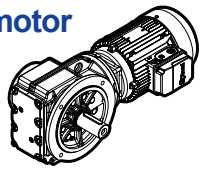

iO 373 FE / iO 973 FE

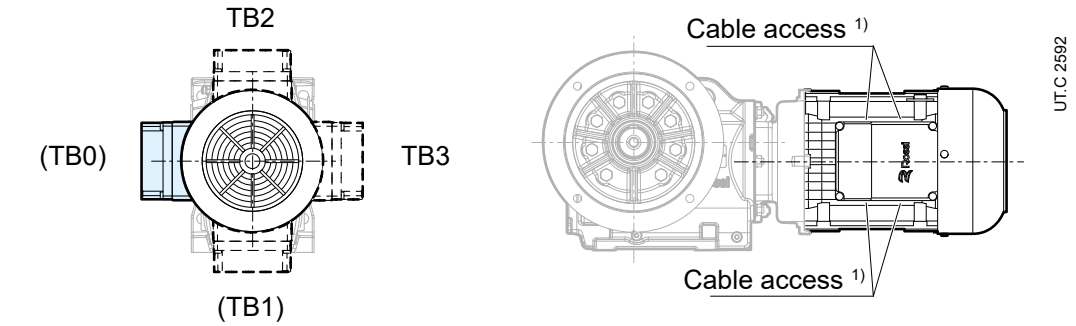

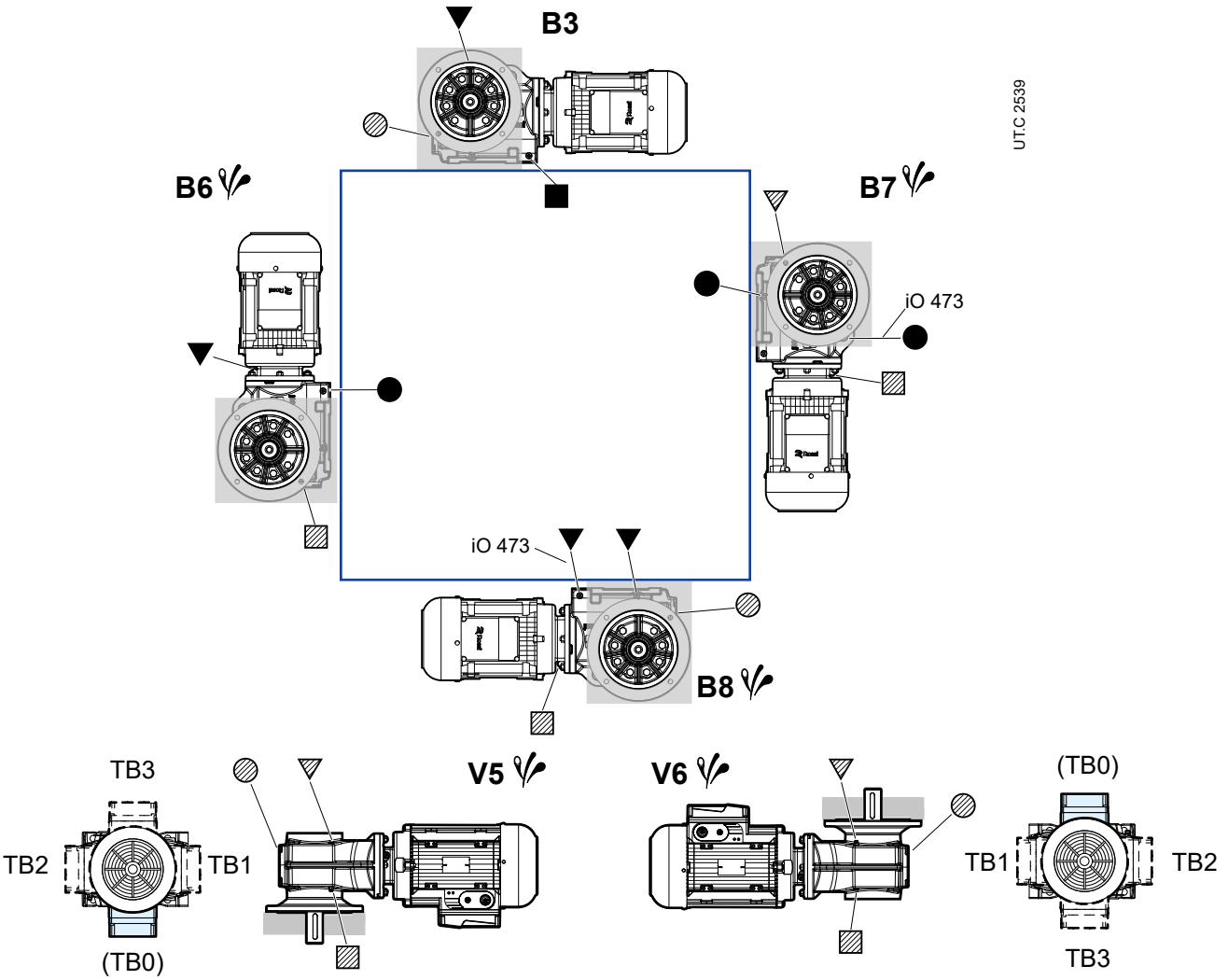

- ▼ breather plug
- ● oil level plug
- ■ oil drain plug
- ▽ breather plug on opposite side (or not in view)
- ◍ oil level plug on opposite side (or not in view)
- ▨ oil drain plug on opposite side (or not in view)
- Possible high oil splash: for the corrective factor f_{t3} of nominal thermal power P_{tN} see page 57.

[1] Cable connection is by the customer: terminal box is integral with motor housing and equipped with knockout cable openings on both sides (one for power cable and one for auxiliary equipment).

7.2.6 Position of breather and drain plug of shaft mounted bevel helical gearmotor

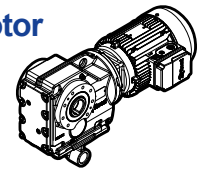

iO 373 SE / iO 973 SE

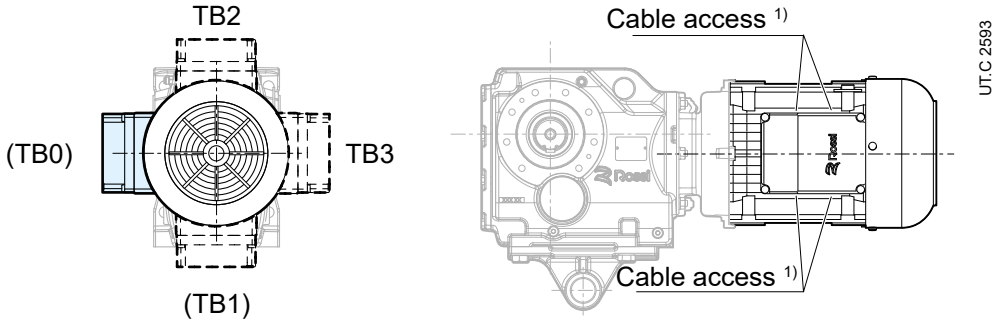

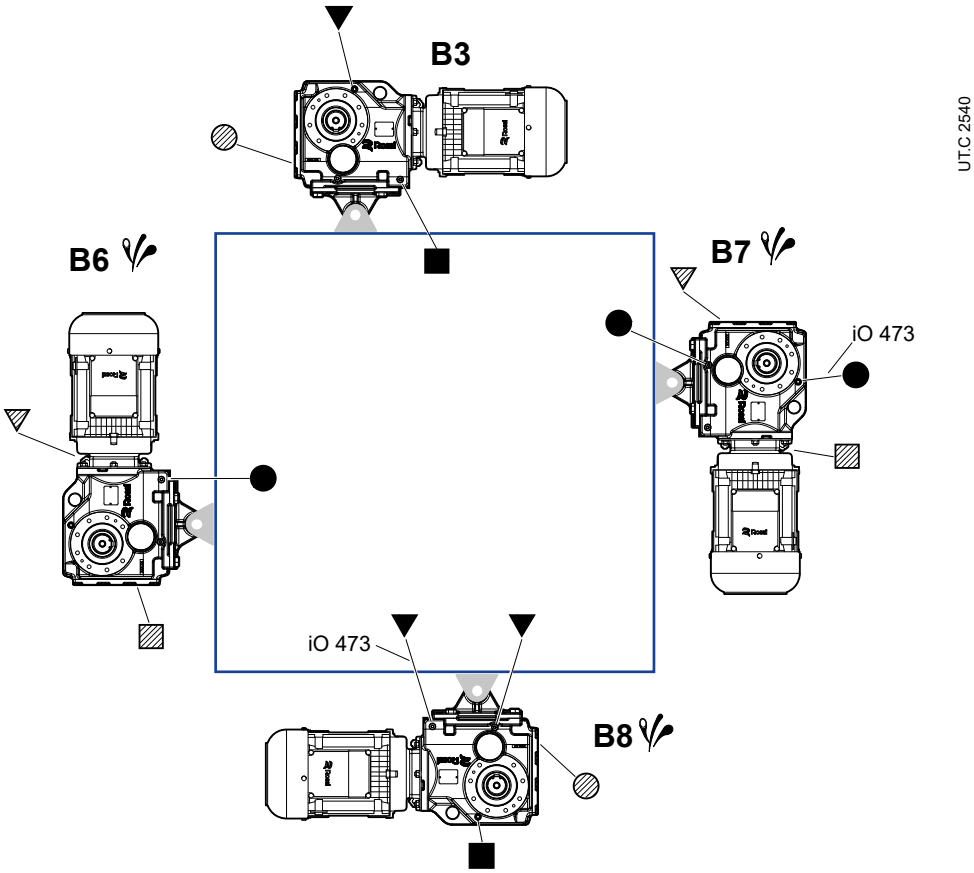

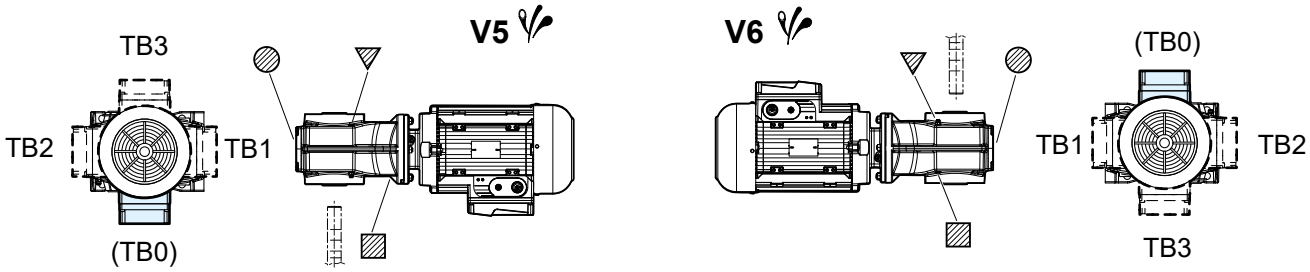

- breather plug
- oil level plug
- oil drain plug
- breather plug on opposite side (or not in view)
- oil level plug on opposite side (or not in view)
- oil drain plug on opposite side (or not in view)
- Possible high oil splash: for the corrective factor f_{t3} of nominal thermal power P_{tN} see page 57.

[1] Cable connection is by the customer: terminal box is integral with motor housing and equipped with knockout cable openings on both sides (one for power cable and one for auxiliary equipment).

7.2.7 Position of breather and drain plug of flange mounted parallel shaft helical gearmotor

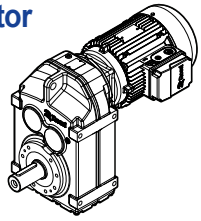

iP 273 PE / iP 973 PE

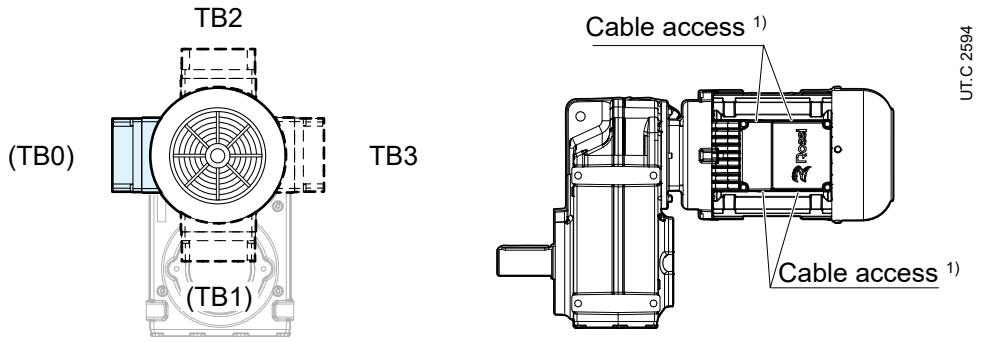

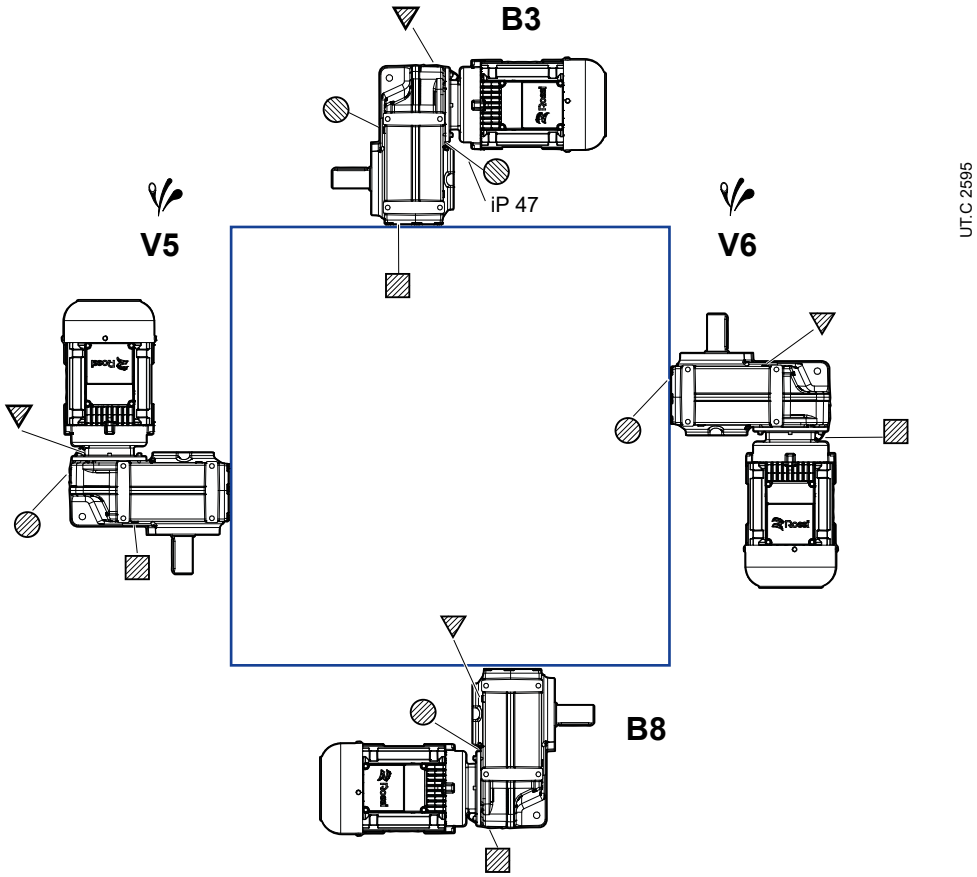

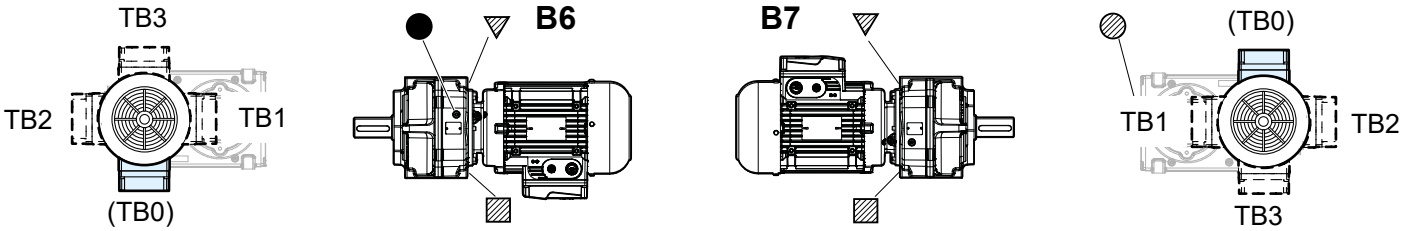

- ▼ breather plug
- ● oil level plug
- ■ oil drain plug

- breather plug on opposite side (or not in view)
- oil level plug on opposite side (or not in view)
- oil drain plug on opposite side (or not in view)

Possible high oil splash: for the corrective factor f_{t3} of nominal thermal power P_{tN} see page 57.

[1] Cable connection is by the customer: terminal box is integral with motor housing and equipped with knockout cable openings on both sides (one for power cable and one for auxiliary equipment).

7.2.8 Position of breather and drain plug of flange mounted parallel shaft helical gearmotor

iP 273 FE / iP 973 FE

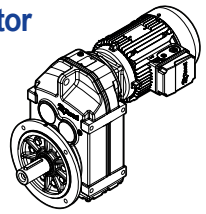

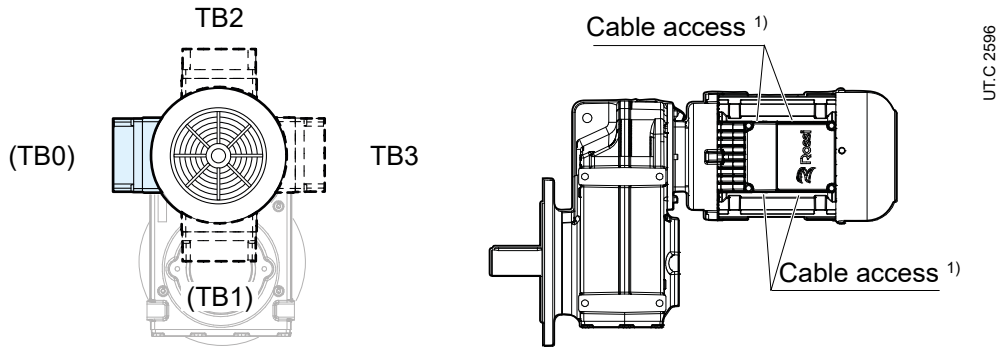

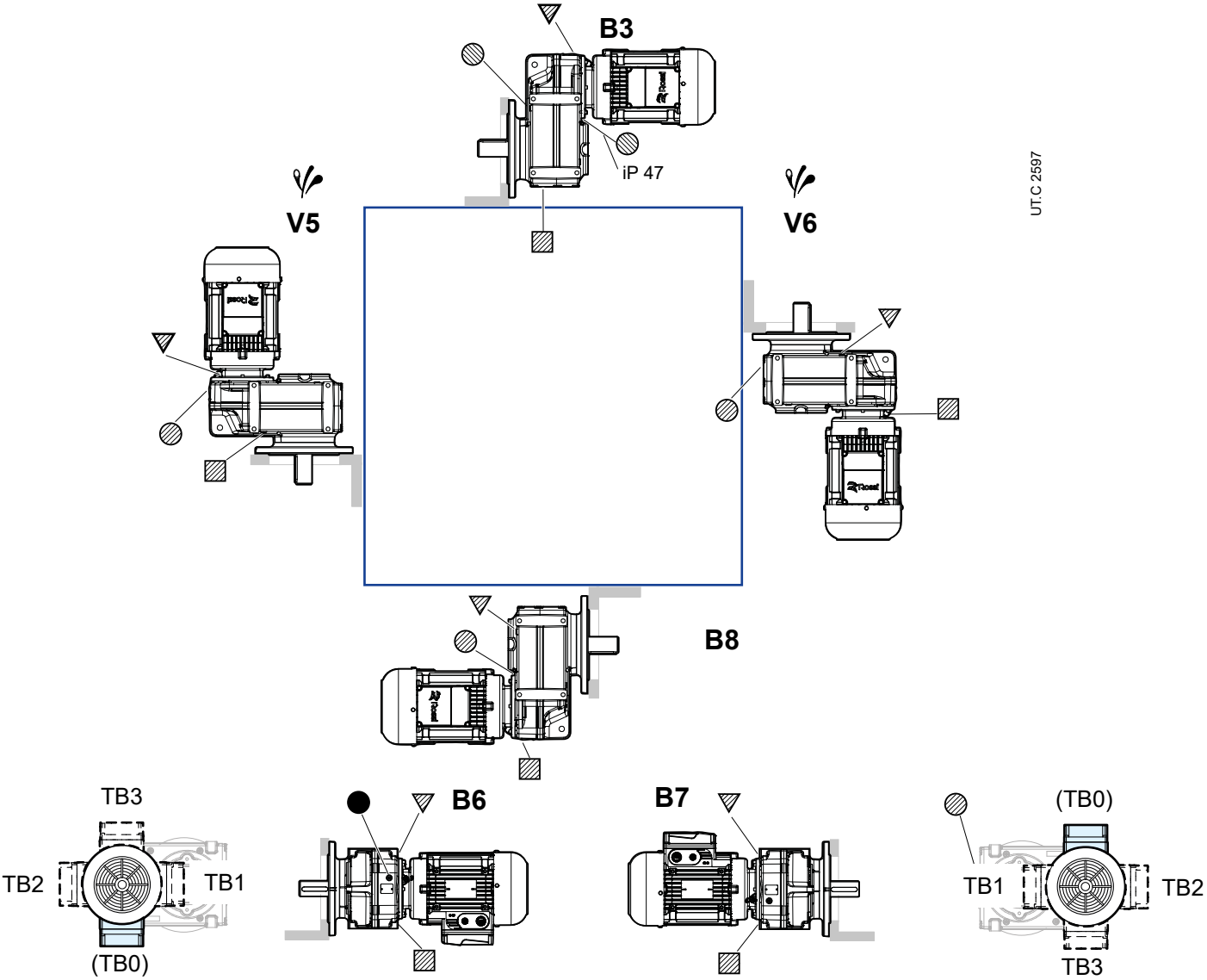

- ▼ breather plug
- ● oil level plug
- ■ oil drain plug
- breather plug on opposite side (or not in view)
- oil level plug on opposite side (or not in view)
- oil drain plug on opposite side (or not in view)
- Possible high oil splash: for the corrective factor f_{t3} of nominal thermal power P_{tN} see page 57.

[1] Cable connection is by the customer: terminal box is integral with motor housing and equipped with knockout cable openings on both sides (one for power cable and one for auxiliary equipment).

8

Structural and operational details

Section contents

8.1	Lubrication	80
8.1.1	General	80
8.1.2	Oil quantity	81
8.1.3	Lubricant table	82
8.1.4	ISO viscosity grade	82
8.1.5	Oil change interval	82
8.1.6	Plug with breather	82
8.2	Motor adapters	83
8.2.1	Adapters for the assembly of standard IEC motors	83
8.2.2	Adapters for the assembly of standard NEMA C-Face motors	84
8.3	Assembling the motor (IEC or NEMA) on adapter	85
8.4	Details of gearmotor fastening flanges	86
8.5	Details of output fastening flanges	88
8.6	Dimensional tolerances	89
8.7	Overall dimensional remarks	90
8.7.1	Overall dimension details of HB and HBZ motors	90
8.7.2	Overall dimension details of accessories	90
8.7.3	Dimensional details of second motor shaft end	91
8.7.4	Parellel shaft helical gearmotors with reduced backlash	91
8.8	Protection covers	92
8.9	Fastening bolts	93

8.1

Lubrication

8.1.1 General

Gear lubrication is oil bath or splash lubrication, and bearings are splash lubricated or grease lubricated for “life” (with or without NILOS ring).
Unless otherwise stated, gearmotors are **supplied filled with synthetic oil** (KLÜBER KlüBersynth GH 6-220, MOBIL Glygoyle 220, SHELL Omala S4 WE 220), providing lubrication – assuming pollution-free surroundings – “long life”.

Ambient temperature range 0 ÷ 40 °C with peaks of -20 °C and +50 °C.

Important:
the order-specific mounting position determines the quantity of lubricant supplied to the gear unit at the time of delivery as well as whether there are bearings with independent lubrication.
Always be sure that the gearmotor is located as per the mounting position ordered, which appears on the name plate.
If the gearmotor is installed in a different mounting position verify, according to the values given in the table, that the oil quantity doesn't change; if so, adjust it consequently.
In addition, the vertical V5 and V6 mounting position requires the application of special grease in the upper bearing.
The mounting position can be changed only with previous authorization by Rossi S.p.A., otherwise the warranty is void.

8.1.2 Oil quantity

Stated lubricant quantities are approximate and indicative for provisioning. The exact quantity the gear reducer is to be filled with is definitely given by the level.

PE...; FE...

Gearmotor size	Oil quantity [l]					
	B3	B6	B7	B8	V5	V6
iC 27...	0,45	0,6	0,6	0,55	0,9	0,8
iC 37...	0,3	0,75	0,95	0,95	1,05	0,85
iC 47...	0,7	1,5	1,5	1,5	1,65	1,6
iC 57...	0,8	1,7	1,7	1,7	2,1	1,9
iC 67...	1,1	1,8	2,0	2,8	2,9	2,4
iC 77...	1,2	2,5	3,4	3,6	3,8	3,3
iC 87...	2,3	6,3	6,5	7,2	7,2	6,4
iC 97...	4,6	11,3	11,7	11,7	13,4	11,7

PE...

Gearmotor size	Oil quantity [l]					
	B3	B6	B7	B8	V5	V6
iO 373	0,5	1,25	1,0	1,0	0,95	0,95
iO 473	0,8	2,0	1,3	1,5	1,6	1,6
iO 573	1,1	2,8	2,2	2,2	2,3	2,1
iO 673	1,1	3,45	2,4	2,6	2,6	2,6
iO 773	2,2	5,8	4,1	4,4	4,2	4,4
iO 873	3,7	10,9	8,0	8,7	8,0	8,0
iO 973	7,0	20,0	14,0	15,7	15,7	15,5

FE...S

Gearmotor size	Oil quantity [l]					
	B3	B6	B7	B8	V5	V6
iO 373	0,5	1,5	1,1	1,1	1,0	1,0
iO 473	0,8	2,2	1,3	1,7	1,6	1,6
iO 573	1,2	3,15	2,2	2,4	2,5	2,3
iO 673	1,1	3,7	2,4	2,8	2,7	2,7
iO 773	2,1	5,9	4,1	4,4	4,5	4,5
iO 873	3,7	11,9	8,2	9,0	8,4	8,4
iO 973	7,0	21,5	14,7	17,3	15,7	16,5

FE...H
SE...H

Gearmotor size	Oil quantity [l]					
	B3	B6	B7	B8	V5	V6
iO 373	0,5	1,4	1,0	1,0	1,0	1,0
iO 473	0,8	2,15	1,3	1,6	1,6	1,6
iO 573	1,2	3,15	2,2	2,4	2,7	2,4
iO 673	1,1	3,7	2,4	2,7	2,6	2,6
iO 773	2,1	5,9	4,1	4,6	4,4	4,4
iO 873	3,7	11,1	8,2	8,8	8,0	8,0
iO 973	7,0	20,0	14,7	15,7	15,7	15,7

PE...; FE...

Gearmotor size	Oil quantity [l]					
	B3	B6	B7	B8	V5	V6
iP 27...	0,60	0,80	0,65	0,70	0,60	0,60
iP 37...	0,95	1,25	0,70	1,25	1,00	1,10
iP 47...	1,50	1,80	1,10	1,90	1,50	1,70
iP 57...	2,25	3,15	1,65	3,15	2,40	2,50
iP 67...	2,70	3,80	1,90	3,80	2,90	3,20
iP 77...	5,90	7,30	4,30	8,00	6,00	6,30
iP 87...	10,8	13,0	7,70	13,8	10,8	11,0
iP 97...	18,5	22,5	12,6	25,2	18,5	20,0

8.1.3 Lubricants table

Important:
Inappropriate lubricants can cause damage to the gear reducer.

The viscosity and type of lubricating oil used for filling **are indicated on the adhesive name plate on the gear reducer.**
Rossi S.p.A. declines any responsibility for damages deriving from the use of other lubricants or from the use outside the expected ambient temperature range. The indications on lubricants do not bind Rossi S.p.A. on the quality of the lubricant supplied by each respective manufacturer. Do not mix different lubricating oils; do not mix synthetic oils with mineral oils.

Brand	Synthetic PAO oil	Synthetic PAG oil	Mineral oil
AGIP	Blasia SX	Blasia S	Blasia
ARAL	Degol PAS	Degol GS	Degol BG
BP	Enersyn EPX	Enersyn SG-XP	Energol GR-XP
CASTROL	Alphasyn EP	Optiflex A	Alpha SP
FUCHS	Renolin Unisys	Renolin PG	Renolin CLP

Brand	Synthetic PAO oil	Synthetic PAG oil	Mineral oil
KLÜBER	Klübersynth GEM4	Klübersynth GH6	Klübersynth GEM1
MOBIL	Mobil SHC Gear	Mobil Glygoyle	Mobilgear 600 XP
SHELL	Omala S4 GX	Omala S4 WE	Omala S2 G
TEXACO	Pinnacle	Synlube CLP	Meropa
TOTAL	Carter SH	Carter SY	Carter EP

8.1.4 ISO viscosity grade

Unless otherwise specified, the gearmotors are **supplied complete with synthetic oil** of viscosity grade ISO VG 220 suitable for most applications in normal industrial environments. For different application conditions or specific needs, please contact Rossi S.p.A.
The following table provides a general guideline for lubricant viscosity selection (average cSt value of kinematic viscosity at 40 °C).

Speed n_2 min^{-1}	**Ambient temperature** T_{amb} C°		
	Mineral Oil		*Synthetic oil*
	0 ÷ 20	10 ÷ 40	0 ÷ 40
> 224	150	150	150
224 ÷ 22.4	150	220	220
22.4 ÷ 5.6	220	320	320
< 5.6	320	460	460

Ambient temperature peaks of ± 10 °C for mineral oils and ± 20 °C for synthetic oils are permissible with respect to the conditions given in the table.

8.1.5 Oil change intervals

An overall guide to oil-change interval is given in the table, and assumes pollution-free surroundings.
When heavy overloads are present, halve the values.

Oil temperature °C	**Oil change interval** [h]	
	Mineral Oil	*Synthetic oil*
≤ 65	8000	25000
65 ÷ 80	4000	18000
80 ÷ 95	2000	12500

Seal rings:
Duration depends on several factors such as dragging speed, temperature, ambient conditions, etc.; as a rough guide it can vary from 3150 to 12500 h.

8.1.6 Breather plugs

The gearmotors are supplied complete with a (metal) breather plug with valve mounted in the correct position according to the type of mounting position (except for type BX, see page 69).
Before commissioning it is necessary to activate the breather by tearing the closing tab on the plug.
It is necessary to keep the breather free from dirt that could compromise its functionality.
In case this is not possible, please contact Rossi S.p.A. to find a different solution.

8.2.1 Adapters for the assembly of standard IEC motors

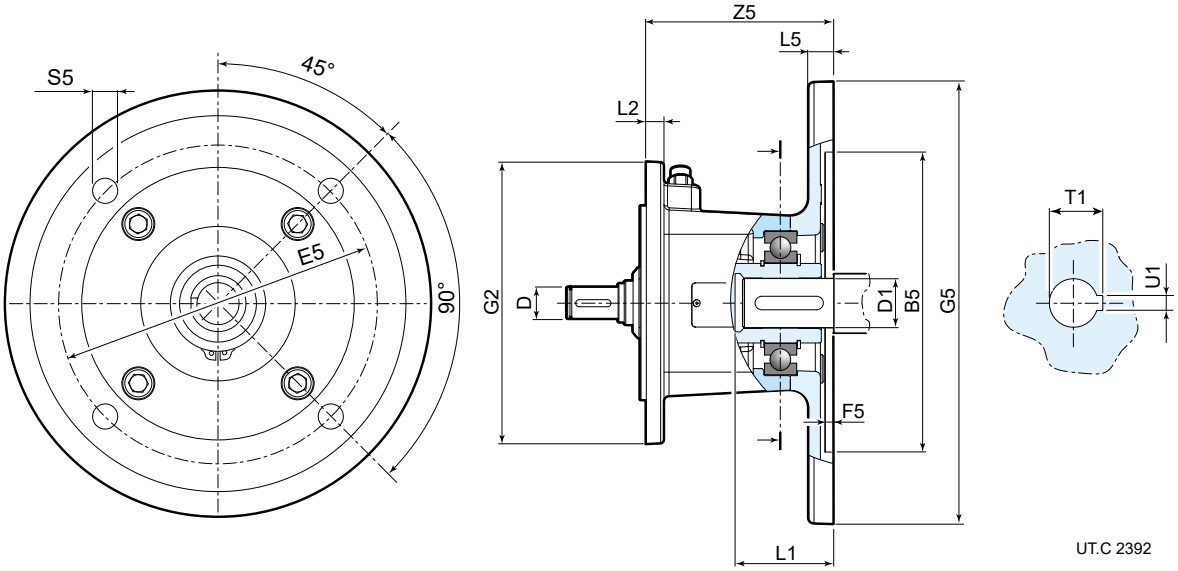

Gear reducer size	IEC motor size	Adapter code	B5 Ø H7	D Ø	D1 Ø F6	E5	F5	G2 Ø	G5 Ø	L1	L2	L5	S5 Ø	T1	U1 F9	Z5	kg
iC 27... iC 37... iO 373 iP 27 ... iP 37 ... iP 47 ...	63	AB12BI063	95	10	11	115	4	120	140	27	8	10	8,5	12,8	4	56,5	2,6
	71	AB12BI071	110	10	14	130	4,5	120	160	32	8	11	8,5	16,3	5	56,5	2,9
	80	AB12CI080	130	12	19	165	4,5	120	200	41,5	8	12	11	21,8	6	111	6,4
	90	AB12DI090	130	14	24	165	4,5	120	200	52	8	12	11	27,3	8	111	6,4
	100, 112MA	AB12EI100	180	16	28	215	5	120	250	62	8	14	13	31,3	8	113	7,6
iC 47... iC 57... iC 67... iO 473 iO 573 iO 673 iP 57 ... iP 67 ...	63	AB16BI063	95	10	11	115	4	160	140	27	10	10	8,5	12,8	4	50,5	3
	71	AB16BI071	110	10	14	130	4,5	160	160	32	10	11	8,5	16,3	5	50,5	3,2
	80	AB16CI080	130	12	19	165	4,5	160	200	41,5	10	12	11	21,8	6	104	7,4
	90	AB16DI090	130	14	24	165	4,5	160	200	52	10	12	11	27,3	8	104	7,4
	100, 112MA	AB16EI100	180	16	28	215	5	160	250	62	10	14	13	31,3	8	106	8,6
	112M	AB16FI112	180	18	28	215	5	160	250	62	10	14	13	31,3	8	106	8,6
	132S, M	AB16GI13S	230	22	38	265	5	160	300	82	10	16,5	13	41,3	10	145	13,6
iC 77... IO 773 iP 77 ...	63	AB20BI063	95	10	11	115	4	200	140	27	12	10	8,5	12,8	4	44,5	3,8
	71	AB20BI071	110	10	14	130	4,5	200	160	32	12	11	8,5	16,3	5	44,5	3,9
	80	AB20CI080	130	12	19	165	4,5	200	200	41,5	12	12	11	21,8	6	98	8,1
	90	AB20DI090	130	14	24	165	4,5	200	200	52	12	12	11	27,3	8	98	8,1
	100, 112MA	AB20EI100	180	16	28	215	5	200	250	62	12	14	13	31,3	8	100	9,3
	112M	AB20FI112	180	18	28	215	5	200	250	62	12	14	13	31,3	8	100	9,3
	132S, M	AB20GI13S	230	22	38	265	5	200	300	82	12	16,5	13	41,3	10	139	15
	132MB	AB20HI13L	230	28	38	265	5	200	300	82	12	16,5	13	41,3	10	139	15
	160	AB20HI160	250	28	42	300	6	200	350	112	12	18	18	45,3	12	186	26,6
iC 87... iO 873 iP 87 ...	80	AB25CI080	130	12	19	165	4,5	250	200	41,5	14	12	11	21,8	6	94	9,2
	90	AB25DI090	130	14	24	165	4,5	250	200	52	14	12	11	27,3	8	94	9,2
	100, 112MA	AB25EI100	180	16	28	215	5	250	250	62	14	14	13	31,3	8	96	10,4
	112M	AB25FI112	180	18	28	215	5	250	250	62	14	14	13	31,3	8	96	10,4
	132S, M	AB25GI13S	230	22	38	265	5	250	300	82	14	16,5	13	41,3	10	134	15,7
	132MB	AB25HI13L	230	28	38	265	5	250	300	82	14	16,5	13	41,3	10	134	15,7
	160	AB25HI160	250	28	42	300	6	250	350	112	14	18	18	45,3	12	181	28,7
	180	AB25LI180	250	32	48	300	6	250	350	112	14	18	18	51,8	14	181	28,3
iC 97... iO 973 iP 97 ...	80	AB30CI080	130	12	19	165	4,5	300	200	41,5	14	12	11	21,8	6	86	11,2
	90	AB30DI090	130	14	24	165	4,5	300	200	52	14	12	11	27,3	8	86	11,2
	100, 112MA	AB30EI100	180	16	28	215	5	300	250	62	14	14	13	31,3	8	88	12,4
	112M	AB30FI112	180	18	28	215	5	300	250	62	14	14	13	31,3	8	88	12,4
	132S, M	AB30GI13S	230	22	38	265	5	300	300	82	14	16,5	13	41,3	10	129	18
	132MB	AB30HI13L	230	28	38	265	5	300	300	82	14	16,5	13	41,3	10	129	18
	160	AB30HI160	250	28	42	300	6	300	350	112	14	18	18	45,3	12	175	30,4
	180	AB30LI180	250	32	48	300	6	300	350	112	14	18	18	51,8	14	175	30,4
	200	AB30MI200	300	38	55 (E6)	350	6	300	400	113	14	18	18	59,3	16	205,5	40

8.2.2 Adapters for the assembly of standard NEMA C-Face motors

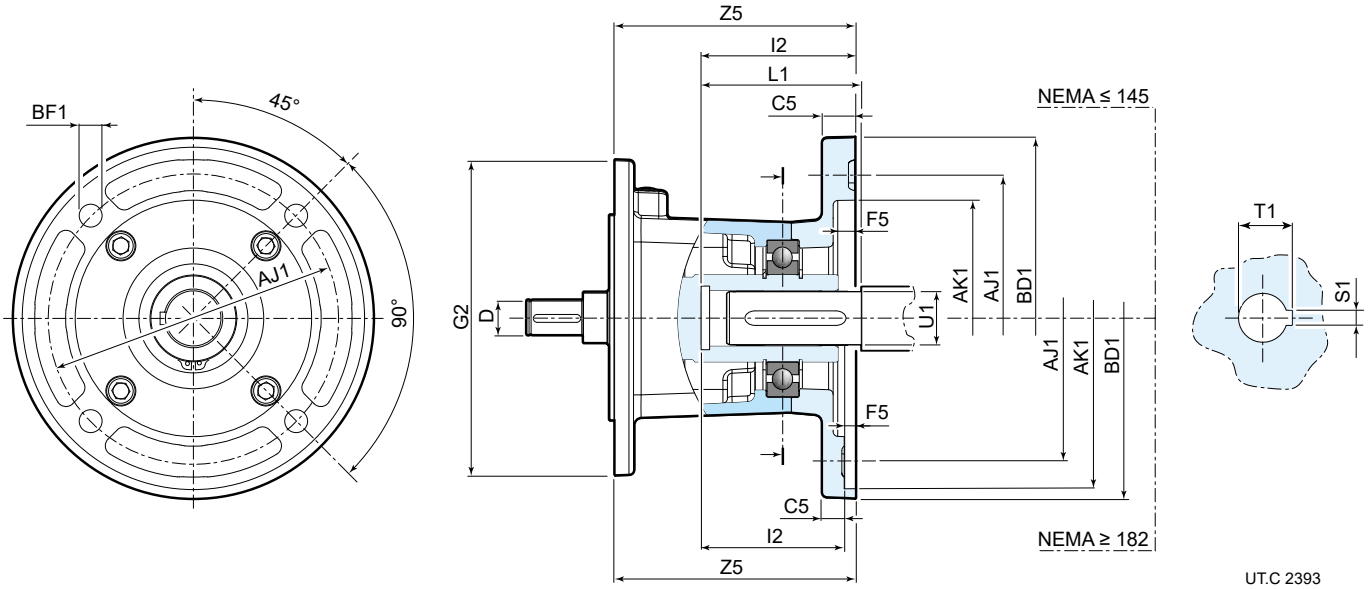

Gear reducer size	NEMA C-face motor size	Adapter code	AJ1 Ø inch	AK1 Ø inch	BD1 Ø inch	BF1 Ø	C5	D Ø	F5	G2 Ø	L1	I2	S1 inch	T1	U1 Ø inch	Z5	kg
iC 27... iC 37... iO 373 iP 27 ... iP 37 ... iP 47 ...	56	AB12BN056	5 7/8	4 1/2	6,5	10,5	10	10	5	120	54,7	59,5	3/16	18	5/8	81	3,3
	143	AB12CN143	5 7/8	4 1/2	6,5	10,5	12	12	5	120	64,2	61	3/16	24,5	7/8	113	5,8
	145	AB12DN145	5 7/8	4 1/2	6,5	10,5	12	14	5	120	64,2	61	3/16	24,5	7/8	113	5,8
	182	AB12EN182	5 7/8	4 1/2	9	14,5	14	16	5,5	120	79,2	76	1/4	31,5	1 1/8	124	8,1
iC 47... iC 57... iC 67... iO 473 iO 573 iO 673 iP 57 ... iP 67 ...	56	AB16BN056	5 7/8	4 1/2	6,5	10,5	10	10	5	160	54,7	59,5	3/16	18	5/8	75	3,6
	143	AB16CN143	5 7/8	4 1/2	6,5	10,5	12	12	5	160	64,2	61	3/16	24,5	7/8	106	6,8
	145	AB16DN145	5 7/8	4 1/2	6,5	10,5	12	14	5	160	64,2	61	3/16	24,5	7/8	106	6,8
	182	AB16EN182	7 1/4	8 1/2	9	14,5	14	16	5,5	160	79,5	76	1/4	31,5	1 1/8	117	9,1
	184	AB16FN184	7 1/4	8 1/2	9	14,5	14	18	5,5	160	79,2	76	1/4	31,5	1 1/8	117	9,1
	213/215	AB16GN213	7 1/4	8 1/2	9	14,5	14	22	5,5	160	97,3	91	5/16	38,6	1 3/8	152	12,1
iC 77... iO 773 iP 77 ...	56	AB20BN056	5 7/8	4 1/2	6,5	10,5	10	10	5	200	54,7	59,5	3/16	18	5/8	69	4,3
	143	AB20CN143	5 7/8	4 1/2	6,5	10,5	12	12	5	200	64,2	61	3/16	24,5	7/8	100	7,5
	145	AB20DN145	5 7/8	4 1/2	6,5	10,5	12	14	5	200	64,2	61	3/16	24,5	7/8	100	7,5
	182	AB20EN182	7 1/4	8 1/2	9	14,5	14	16	5,5	200	79,2	76	1/4	31,5	1 1/8	111	9,8
	184	AB20FN184	7 1/4	8 1/2	9	14,5	14	18	5,5	200	79,2	76	1/4	31,5	1 1/8	111	9,8
	213/215	AB20GN213	7 1/4	8 1/2	9	14,5	14	22	5,5	200	97,3	91	5/16	38,6	1 3/8	146	13,5
	254/256	AB20HN254	7 1/4	8 1/2	10	14,5	14	28	5,5	200	115,3	109	3/8	45,6	1 5/8	232	26,4
iC 87... iO 873 iP 87 ...	143	AB25CN143	5 7/8	4 1/2	6,5	10,5	12	12	5	250	64,2	61	3/16	24,5	7/8	96	8,6
	145	AB25DN145	5 7/8	4 1/2	6,5	10,5	12	14	5	250	64,2	61	3/16	24,5	7/8	96	8,6
	182	AB25EN182	7 1/4	8 1/2	9	14,5	14	16	5,5	250	79,2	76	1/4	31,5	1 1/8	107	10,9
	184	AB25FN184	7 1/4	8 1/2	9	14,5	14	18	5,5	250	79,2	76	1/4	31,5	1 1/8	107	10,9
	213/215	AB25GN213	7 1/4	8 1/2	9	14,5	14	22	5,5	250	97,3	91	5/16	38,6	1 3/8	141	14,3
	254/256	AB25HN254	7 1/4	8 1/2	10	14,5	14	28	5,5	250	115,3	109	3/8	45,6	1 5/8	227	28,4
	284/286	AB25LN284	9	10 1/2	11,25	14,5	16	32	5,5	250	134,3	128	1/2	53,4	1 7/8	229	29,5
iC 97... iO 973 iP 97 ...	143	AB30CN143	5 7/8	4 1/2	6,5	10,5	12	12	5	300	64,2	61	3/16	24,5	7/8	88	10,6
	145	AB30DN145	5 7/8	4 1/2	6,5	10,5	12	14	5	300	64,2	61	3/16	24,5	7/8	88	10,6
	182	AB30EN182	7 1/4	8 1/2	9	14,5	14	16	5,5	300	79,2	76	1/4	31,5	1 1/8	99	12,9
	184	AB30FN184	7 1/4	8 1/2	9	14,5	14	18	5,5	300	79,2	76	1/4	31,5	1 1/8	99	12,9
	213/215	AB30GN213	7 1/4	8 1/2	9	14,5	14	22	5,5	300	97,3	91	5/16	38,6	1 3/8	136	16,4
	254/256	AB30HN254	7 1/4	8 1/2	10	14,5	14	28	5,5	300	115,3	109	3/8	45,6	1 5/8	221	30,2
	284/286	AB30LN284	9	10 1/2	11,25	14,5	16	32	5,5	300	134,3	128	1/2	53,4	1 7/8	223	31,3
	324/325	AB30MN324	11	12 1/2	14	18	20	38	5,5	300	150,3	144	1/2	59,7	2 1/8	208	41

8.3

Assembling the motor (IEC or NEMA) on adapter

Prior to fitting the customer-supplied motor, verify that the static bending torque M_b generated by the weight of the motor on the adapter counterflange is below the permitted value M_{bmax}, shown in table below:

$M_b < M_{bmax}$

where:

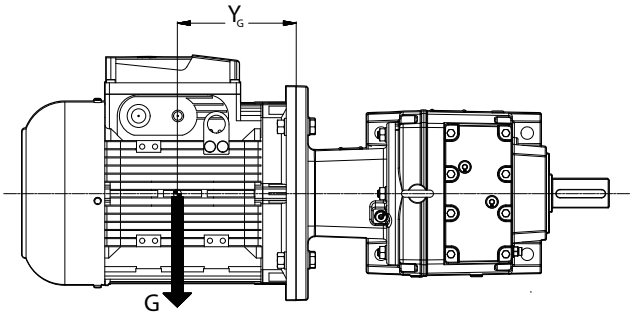

UT.C. 2440

$M_b = (G \cdot Y_G) / 1000$ [N m]

G [N] motor weight; numerically approximately equal to motor mass, expressed in kg, multiplied by 10.

Y_G [mm] distance of motor center of gravity from flange surface

Motors that are too long and too thin, even if the bending moment is below the prescribed table limits, can generate abnormal vibrations during operation.

In these cases, a suitable additional motor support must be provided (see specific motor documentation).

Loads above those permitted may be present in dynamic applications if the gearmotor is subject to translation, rotation or oscillation: contact Rossi to examine each individual case.

Maximum bending torque M_{bmax} related to IEC motor adapter

IEC adapter code	Maximum bending torque M_{bmax} [N m]				
	iC 27, iC 37 iO 37, iP 27 ... iP 47	iC 47 ... iC 67 iO 47 ... iO 67 iP 57, iP 67	iC 77 iO 77 iP 77	iC 87 iO 87 iP 87	iC 97 iO97 iP 97
AB12BI063, AB12BI071, AB16BI063, AB16BI071, AB20BI063, AB20BI071	55				
AB12CI080, AB12DI090, AB16CI080, AB16DI090, AB20CI080, AB20DI090 AB25CI080, AB25DI090, AB30CI080, AB30DI090	90	265			
AB12EI100, AB16EI100, AB16FI112, AB20EI100, AB20FI112 AB25EI100,AB25FI112, AB30EI100, AB30FI112	200				
AB16GI13S, AB20GI13S, AB25GI13S, AB30GI13S		290	870		
AB20HI13L, AB25HI13L, AB30HI13L					
AB20HI160, AB25HI160, AB30HI160			935	1155	
AB25LI180, AB30LI180					
AB30MI200					1645

Maximum bending torque M_{bmax} related to NEMA motor adapter

NEMA adapter code	Maximum bending torque M_{bmax} [N m]				
	iC 27, iC 37 iO 37, iP 27 ... iP 47	iC 47 ... iC 67 iO 47 ... iO 67 iP 57, iP 67	iC 77 iO 77 iP 77	iC 87 iO 87 iP 87	iC 97 iO97 iP 97
AB12BN056, AB16BN056, AB20BN056	45				
AB12CN143, AB12DN145, AB16CN143, AB16DN145, AB20CN143 AB20DN145, AB25CN143, AB25DN145, AB30CN143, AB30DN145	72	250			
AB12EN182, AB16EN182, AB16FN184, AB20EN182, AB20FN184, AB25EN182, AB25FN184, AB30EN182, AB30FN184	160				
AB16GN213, AB20GN213, AB25GN213, AB30GN213		250	655		
AB20HN254, AB25HN254, AB30HN254		740	1000		
AB25LN284, AB30LN284					
AB30MN324					1430

8.4

Details of gearmotor fastening flanges

Solid output shaft

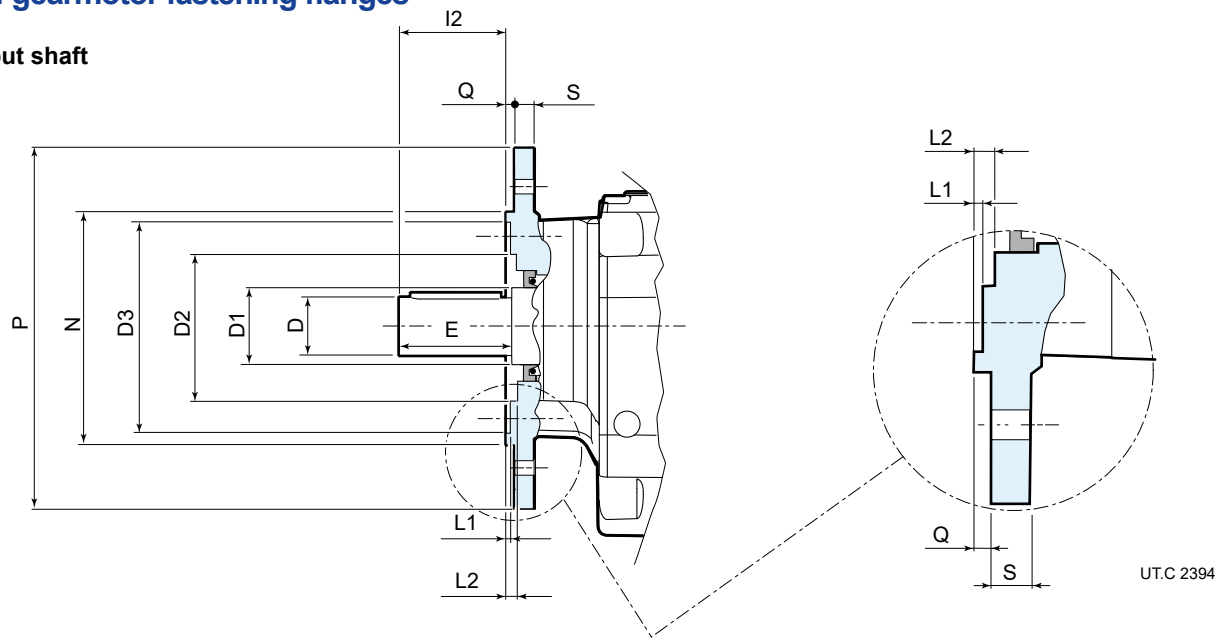

Gear reducer size	B5 flange code	P Ø	N Ø j6	S	D Ø k6	D1 Ø	D2 Ø	D3 Ø	Q	l2	E	L1	L2
iC 27...	F212	120	80	8	25	30	56	66	3	50	50	2	6
	F214	140	95	9	25	30	56	80	3	50	50	2	6
	F216	160	110	10	25	30	56	94	3,5	50	50	2,6	6,5
iC 37...	F312	120	80	8	25	35	63	68	3	50	50	5	7
	F314	140	95	10	25	35	11	83	3	50	50	5	7
	F316	160	110	10	25	35	61	96	3,5	50	50	2	7,5
	F320	200	130	12	25	35	61	118	3,5	50	50	1	7,5
iC 47...	F414	140	95	10	30	35	77	82	3	60	60	4	6
	F416	160	110	10	30	35	75	96	3,5	60	60	1	6,5
	F420	200	130	12	30	35	75	116	3,5	60	60	1	6,5
iC 57...	F516	160	110	10	35	40	82	97	3,5	70	70	4	6,5
	F520	200	130	12	35	40	78	116	3,5	70	70	-0,5	6,5
	F525	250	180	15	35	40	78	160	4	70	70	0	7
iC 67...	F620	200	130	12	35	50	96	120	3,5	70	70	3,5	7
	F625	250	180	15	35	50	92	162	4	70	70	0,5	7,5
iC 77...	F725	250	180	15	40	52	94	160	4	80	80	0,5	7
	F730	300	230	18,5	40	52	113	210	4	80	80	0,5	7
iC 87...	F830	300	230	18,5	50	62	119	214	4	100	100	0	8
	F835	350	250 h6	18	50	62	138	225	5	100	100	0	8
iC 97...	F935	350	250 h6	18	60 m6	72	146	234	5	120	120	1	9
	F945	450	350 h6	22	60 m6	72	156	320	5	120	120	1	9

Gear reducer size	B5 flange code	P Ø	N Ø j6	S	D Ø k6	D1 Ø	D2 Ø	D3 Ø	Q	l2	E	L1	L2
iP 27 ...	F216	160	110	10	25	30	56	94	3,5	50	50	2,6	6,5
iO 373, iP 37 ...	F316	160	110	10	25	35	61	96	3,5	50	50	2	7,5
iO 473, iP 47 ...	F420	200	130	12	30	35	75	116	3,5	60	60	1	6,5
iO 573, iP 57 ...	F525	250	180	15	35	40	78	160	4	70	70	0	7
iO 673, iP 67 ...	F625	250	180	15	40	50	92	162	4	70	70	0,5	7,5
iO 773, iP 77 ...	F730	300	180	15	50	52	94	160	4	80	80	0,5	7
iO 873, iP 87 ...	F835	350	250 h6	18	60 m6	62	138	225	5	100	100	0	8
iO 973, iP 97 ...	F945	450	350 h6	22	70 m6	72	156	320	5	120	120	1	9

Hollow output shaft

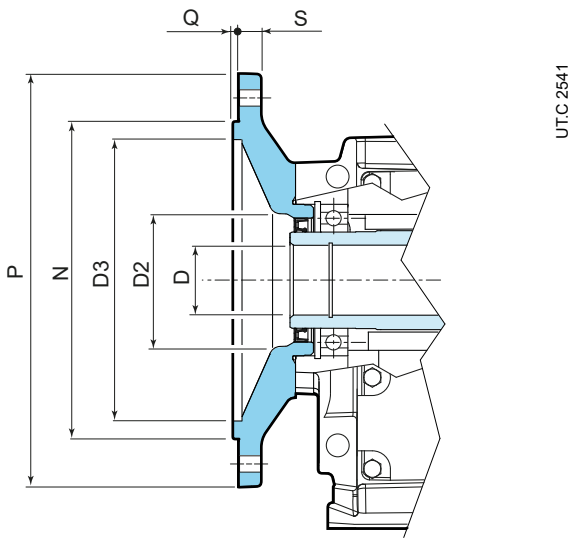

Gear reducer size	B5 flange code	P Ø	N Ø j6	S	D Ø H7	D2 Ø	D3 Ø	Q
iP 27 ...	**F216**	160	110	10	25	56	94	3,5
iO 373, iP 37 ...	**F316**	160	110	10	25	61	94	3,5
iO 473, iP 47 ...	**F420**	200	130	12	35	75	113	3,5
iO 573, iP 57 ...	**F525**	250	180	15	40	78	155	4
iO 673, iP 67 ...	**F625**	250	180	15	40	78	155	4
iO 773, iP 77 ...	**F730**	300	230	15	50	94	204	4
iO 873, iP 87 ...	**F835**	350	250	18	60	138	226	5
iO 973, iP 97 ...	**F945**	450	350	22	70	156	324	5

8.5

Details of output fastening flanges

B14

iO

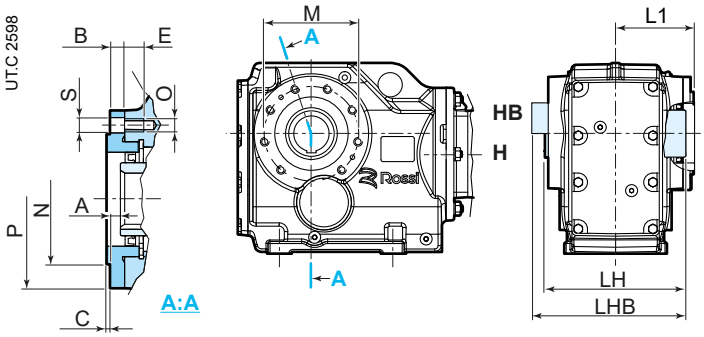

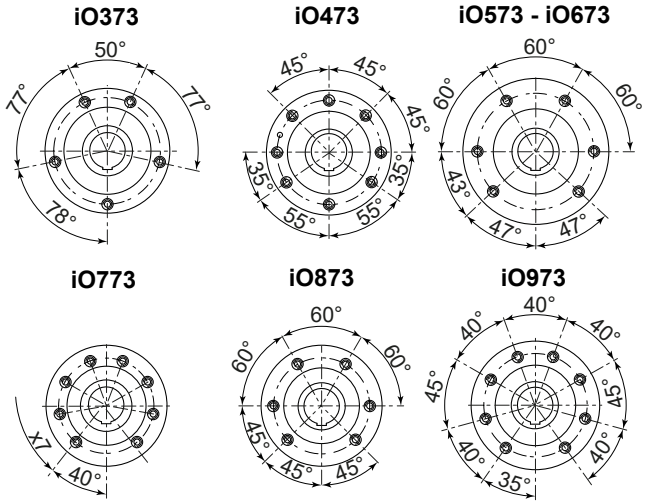

B14 flange can be provided on either side A or side B and is always supplied mounted

Gear reducer size	A	B	C	E	L1	LH	LHB	M Ø	N Ø j6	O	P Ø	S
iO 373	9	11,5	3	11	72	120	150,5	94	80	M8	110	9
iO 473	8	11	3	11	86	150	185	102	80	M8	120	9
iO 573	9	12	3,5	17	95,5	166	200	125	105	M12	155	13,5
iO 673	8,5	12	3,5	17	102	180	216	125	105	M12	155	13,5
iO 773	10	14	3,5	17	118,5	210	251	142	125	M12	170	13,5
iO 873	11	15	4	26	125	240	290	178	155	M16	215	17,5
iO 973	14	18	4	26	168	300	356	220	180	M16	260	17,5

iP

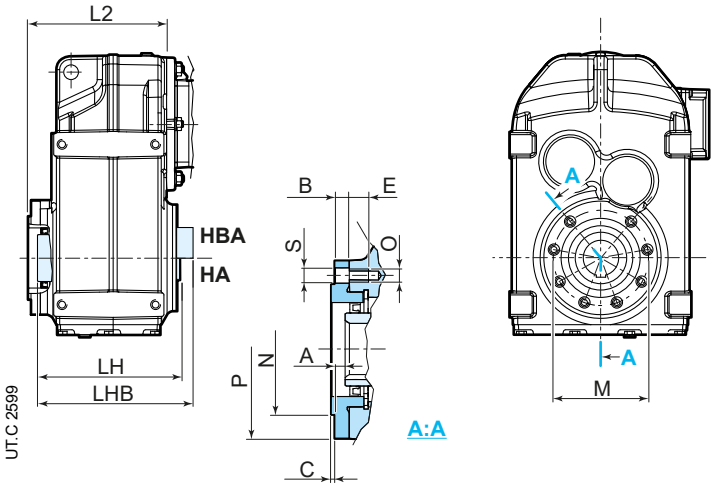

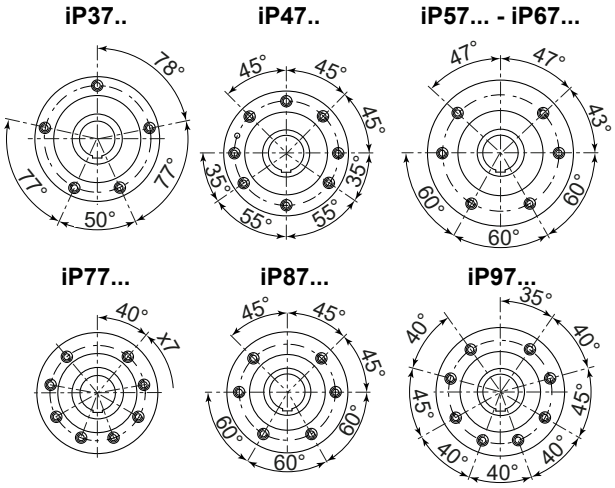

B14 flange is always supplied mounted on opposite motor side (only side suitable for installation)

Gear reducer size	A	B	C	E	L2	LH	LHB	M Ø	N Ø j6	O	P Ø	S Ø
iP 37 ...	9	11,5	3	11	122	122,5	150,5	94	80	M8	110	9
iP 47 ...	8	11	3	11	144	152,5	185	102	80	M8	120	9
iP 57 ...	9	12	3,5	17	162	169	200	125	105	M12	155	13,5
iP 67 ...	8,5	12	3,5	17	173	183	216	125	105	M12	155	13,5
iP 77 ...	10	14	3,5	17	206,5	213	251	142	125	M12	170	13,5
iP 87 ...	11	15	4	26	239	243	290	178	155	M16	215	17,5
iP 97 ...	14	18	4	26	292	303	356	220	180	M16	260	17,5

Shaft height of foot mounted design iC...P...

h ≤ 250 mm ⟶ tolerance -0,5 ÷ 0 mm

h > 250 mm ⟶ tolerance -1 ÷ 0 mm

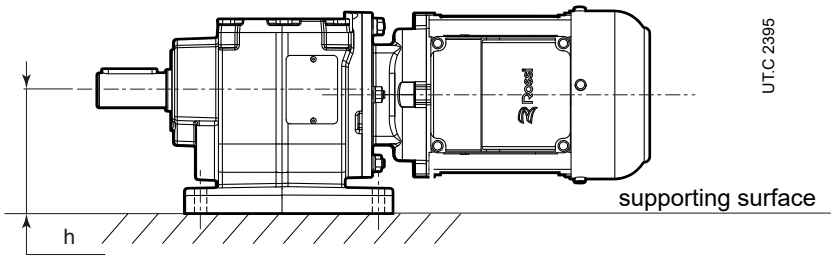

Attention!
Always check that the motor does not protrude from the foot mounting surface.

Low speed shaft end

External diameter: Ø D ≤ 50 mm ⟶ tolerance ISO k6

Ø D > 50 mm ⟶ tolerance ISO m6

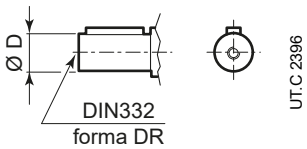

Tapped butt-end hole: Ø D ≤ 24 mm ⟶ M8

Ø D > 24 ÷ 30 mm ⟶ M10

Ø D > 30 ÷ 38 mm ⟶ M12

Ø D > 38 ÷ 50 mm ⟶ M16

Ø D > 50 mm ⟶ M20

Key and keyway:

key to DIN 6885
keyway width ISO N9

Hollow output shaft

Internal diameter: Ø D ⟶ tolerance ISO H7

Key and keyway:

linguetta secondo DIN 6885
larghezza cava linguetta ISO N9

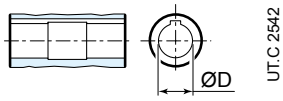

Flange

Spigot: Ø N ≤ 230 mm (Ø P 120 ÷ 300 mm) ⟶ tolerance ISO j6

Ø N > 230 mm (Ø P 350 ÷ 450 mm) ⟶ tolerance ISO h6

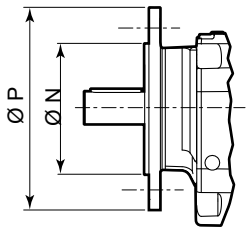

UT.C 2397

8.7

Overall dimensional remarks

8.7.1 Overall dimension details of HB and HBZ motors

The meaning of the total dimensions shown in the drawings in ch.10 and 12 is explained below:

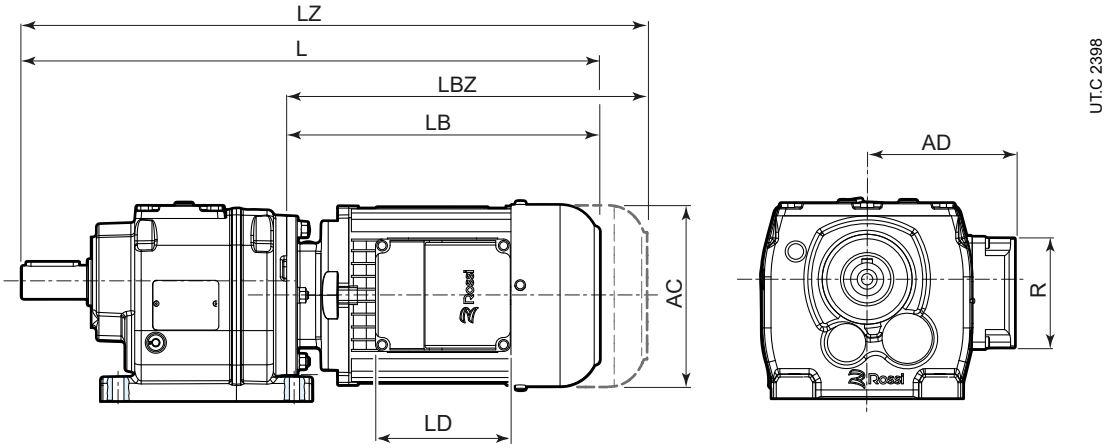

where:

- L — total length of gearmotor
- LZ — total length of gearmotor with brake
- LB — total length of motor
- LBZ — total length of motor with brake
- AC — diameter of motor fan cover
- LD — length of motor terminal box
- AD — radial dimensions of motor terminal box
- R — width of motor terminal box

Motor length and terminal box dimension can slightly change according to specific motor options; if necessary, refer to cat. TX. or contact Rossi S.p.A.

8.7.2 Overall dimension details of accessories

Lifting eyelets and eyebolts:
iC helical inline gearmotors sizes ≤ iC 57… are equipped with lifting eyelets for transport; bigger sizes are equipped with eyebolts.
All **iO** bevel helical and parallel shaft helical gearmotors **iP** are equipped with lifting hole on the housing specifically realized for transport.

Breather plugs:
The dimensional drawings given in Chapters 10, 12 and 14 do not indicate the dimensions of the breather plug because its position depends on the mounting position.
The total overall dimensions can slightly differ from the stated ones.

Shrink disc:
For optimal torque transmission, when using a shrink disk on a hollow shaft, it is necessary to follow the directions below:

- customer's coupling shaft must be solid
- the material of customer's coupling shaft must have an elastic limit Re and/or $Rp_{0.2} \geq 305\ N/mm^2$
- surface roughness ≤ 16 µm

Refer to the dedicated dimensional drawings for dimensions of gearboxes equipped with shrink discs.

Rubber damper:
The rubber damper, provided for versions with PE...H, HB and HD feet requires that upon assembly it is preloaded by compressing by a value ΔL indicated on the dimensional drawings in Chapter 14.

8.7.3 Dimensional details of second motor shaft end

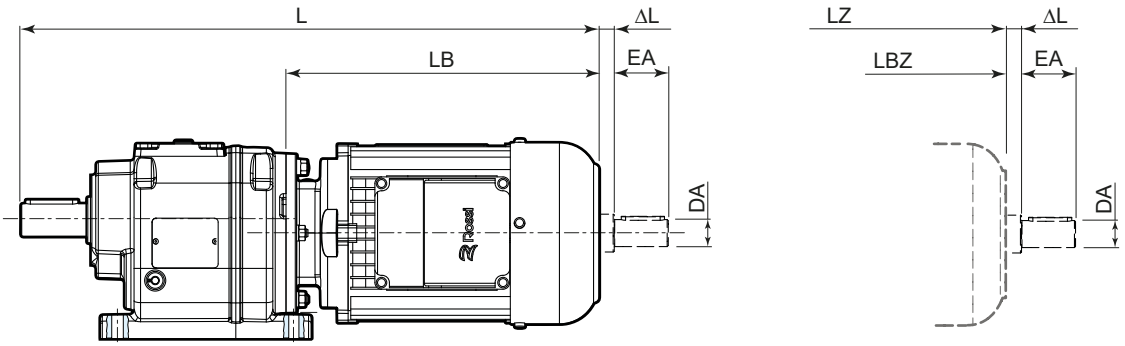

Motor size	Power	Poles	DA Ø	EA	ΔL ≈
63	A, B	2, 4, 6	11	23	5
71	A, B	2, 4, 6	11	23	5
80	A, B	2, 4, 6	14	30	7
90	S, L, LA	2, 4, 6	14	30	7
100	LA	2, 4, 6	14	30	8
112	MA	4	14	30	8
112	M	2, 4, 6	19	40	9
132	S, SB	2, 4, 6	19	40	9
132	M	4	19	40	9
132	MB	4	28	60	9

8.7.4 Parellel shaft helical gearmotors with reduced backlash

Gearmotors iP 87 ... and iP 97 ... with reduced backlash and hollow shaft, have different dimensions compared with the standard design, according to following table.

P...H - GR
P...HBA / HDA - GR

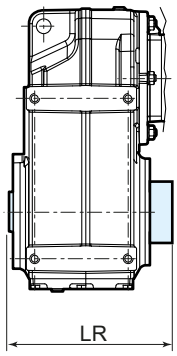

F...H - GR
F...HBA / HDA - GR

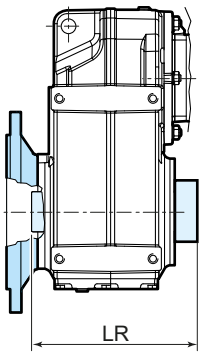

P...H - B14 / GR
P...HBA / HDA - B14 / GR

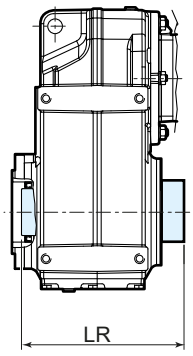

UT.C 2600

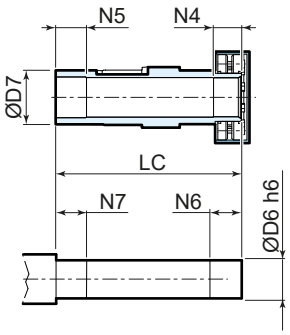

Gear reducer size	D6 Ø h6	D7 Ø	LC	LR	N4	N5	N6	N7
iP 87 ...	65	85	299,5	308	41	40	46	45
iP 97 ...	75	95	367	378	55	50	60	55

8.8

Protection covers

The following gearboxes with hollow output shaft and output shaft with shrink disc are supplied with rotating protection cover.

Gear reducer type	Gear reducer size
iO	373 - 973
iP	27... - 97...

Assembly dimensions of motor and position of terminal box with rotating protection cover
In the case of iP parallel gearboxes, the size of the motor used may be limited due to the size of the protection cover

UT.C 2601

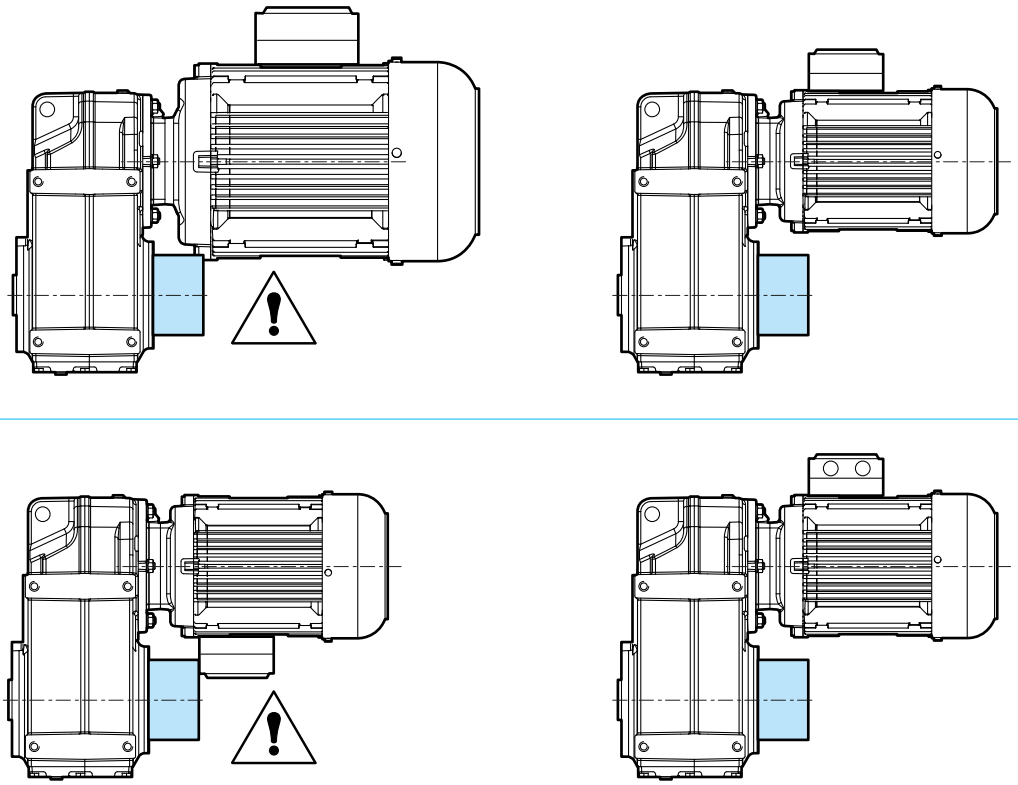

Rossi recommends, in the case of iP gearboxes, to position the terminal box not at 90° in the case of large protection covers so as to facilitate assembly and maintenance.

The following table shows the maximum Rossi motor that can be mounted, depending on the size of the gearbox, to avoid difficulties relative to the presence of the protection cover.

iP size	37	47	57	67	77	87	97
Max installable motor size	71B	80B	90L	112M	132L	160L	180L

8.9 Fastening bolts

Unless otherwise stated, usually it is sufficient to use bolts in class 8.8; The following cases are an exception, for which bolts with strength class 10.9 must be used:

- iC 372 - iC 373 FE with flange F312 and F314
- iC 472 - iC 473 FE with flange F414
- iC 572 - iC 573 FE with flange F516

Thoroughly degrease the bolts before tightening. It is recommended to apply locking adhesives on the fastening bolts and on flange mating surfaces, in the event of heavy vibrations, heavy duties and/or frequent drive inversions.
Tighten the bolts to the tightening torque stated in the table.

Fastening bolts	Tightening torque *Ms* for bolts for foot and flange fastening N m	
	cl. 8.8	cl. 10.9
M4	2,9	4
M5	6	8,5
M6	11	15
M8	25	35
M10	50	70
M12	85	120
M14	135	190
M16	205	290
M18	280	400
M20	400	560
M22	550	770
M24	710	1000

9

Helical inline Selection tables - iC

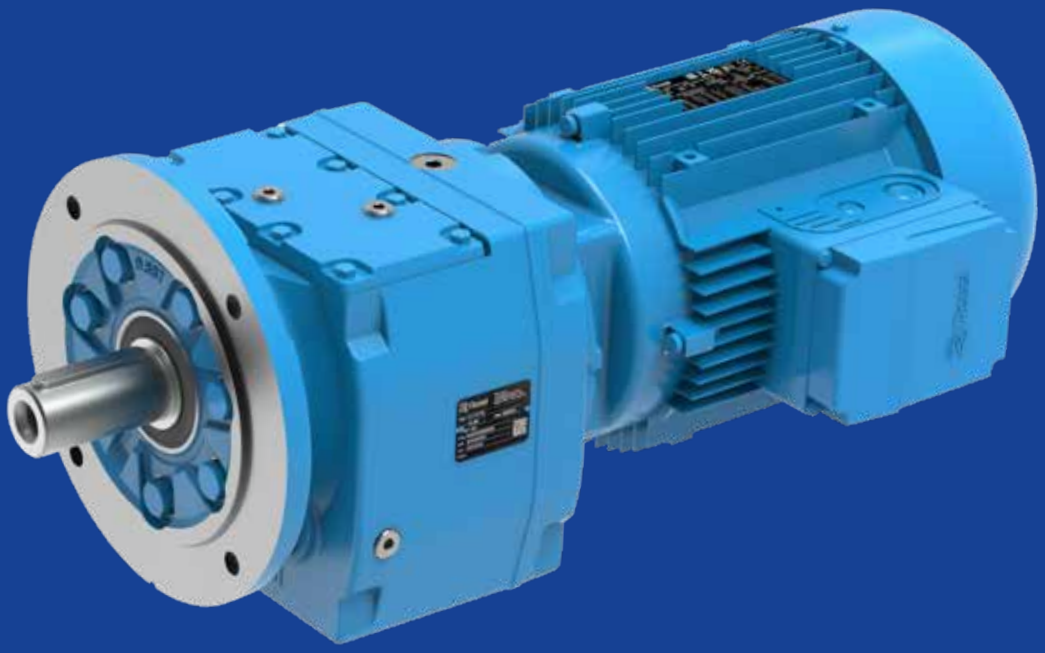

Section contents

9.1	Possible geometrical combinations	96
9.1.1	General	96
9.1.2	Key	96
9.2	Geometrical coupling tables	97
9.3	Selection tables [kW]	106

9.1

Possible geometrical combinations

9.1.1 General

The tables in the following pages show the geometrical coupling possibilities with HB 4 poles motors, according to train of gears (2 or 3 stages) and transmission ratio.
Also the low speed shaft rotation speed n_2, calculated according to a nominal input speed equal to n_1 = 1400 min^{-1}, are shown.
The values of the nominal torque at the low speed shaft M_{N2} and of the permissible radial load F_{r2} acting on the center line are also referred to this speed.

At the time of selection, it is necessary to evaluate the actual operating conditions in relation to the actual power of the applied motor as indicated in ch. 6.

9.1.2 Key

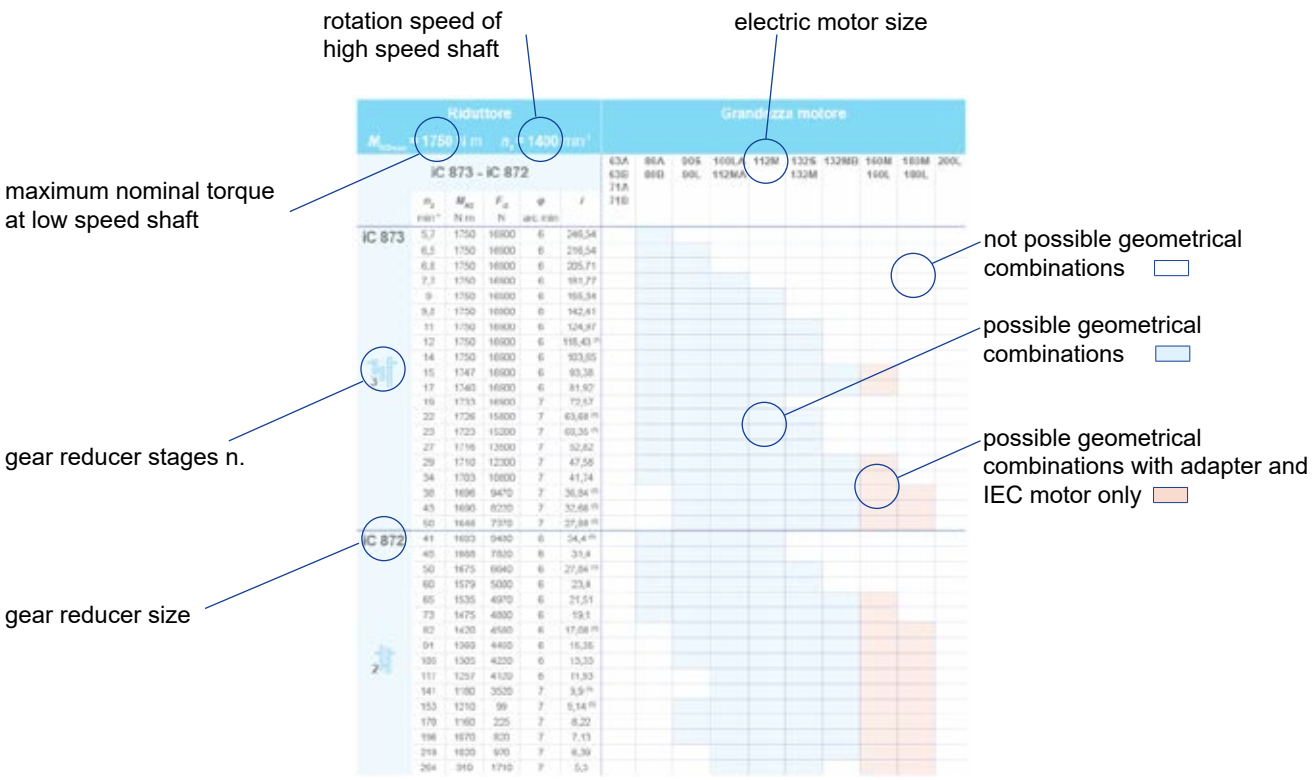

where

- n_2 low speed shaft rotation speed
- M_{N2} nominal torque at low speed shaft
- F_{r2} permissible radial load acting on center line of low speed shaft
  (at speed n_2 and with torque M_{N2} indicated in the table - valid only for foot mounted gearmotor design)
- φ reduced backlash, referred to low speed shaft
  (tolerance ± 2 arc min - if value is not specified, the reduced backlash option is not available)
- i transmission ratio

Gear reducer M_{N2max} = 145 N m n_1 = 1400 min^{-1}						Motor size									
iC 273 - iC 272	n_2 min^{-1}	M_{N2} N m	F_{r2} N	φ arc min	i	63A 63B 71A 71B	80A 80B	90S 90L	100LA 112MA	112M	132S 132M	132MB	160M 160L	180M 180L	200L
iC 273	10	145	4230	-	135,09										
	11	145	4230	-	123,91										
	13	144	4230	-	105,49										
	15	143	4230	-	90,96										
	17	143	4230	-	84,78										
	19	142	4230	-	74,11										
	20	142	4180	-	69,47										
	23	142	3980	-	61,3										
3	25	141	3840	-	55,87										
	29	141	3630	-	48,17										
	31	140	3530	-	44,9										
	36	140	3350	-	39,25										
	38	139	3260	-	36,79										
	43	139	3100	-	32,47										
	49	138	2950	-	28,78										
	57	138	2760	-	24,47										
iC 272	49	138	2940	-	28,37										
	54	138	2840	-	26,09										
	63	137	2660	-	22,32										
	72	137	2510	-	19,35										
	77	136	2440	-	18,08										
	90	136	2290	-	15,63										
	105	135	2140	-	13,28 (1)										
	118	134	1980	-	11,86										
2	138	134	1890	-	10,13										
	149	130	900	-	9,41										
	172	123	870	-	8,16										
	183	120	900	-	7,63 (1)										
	212	110	880	-	6,59										
	250	102	880	-	5,6 (1)										
	280	96	860	-	5 (1)										
	328	87	920	-	4,27										
	350	85	900	-	4 (1)										
	415	79	900	-	3,37										

(1) Finite transmission ratio *i*

Gear reducer M_{N2max} = 224 N m n_1 = 1400 min^{-1}						Motor size									
iC 373 - iC 372						63A 63B 71A 71B	80A 80B	90S 90L	100LA 112MA	112M	132S 132M	132MB	160M 160L	180M 180L	200L
	n_2 min^{-1}	M_{N2} N m	F_{r2} N	φ arc min	i										
iC 373	10	217	4940	8	134,82										
	11	214	4940	8	123,66										
	13	213	4940	8	105,28										
	15	212	4940	8	90,77										
	17	212	4940	8	84,61										
	19	211	4940	8	73,96										
	20	211	4940	8	69,33										
	23	210	4940	9	61,18										
3	25	209	4940	9	55,76										
	29	208	4940	9	48,08										
	31	208	4940	9	44,81										
	36	207	4760	9	39,17										
	38	206	4540	9	36,72										
	43	206	4120	9	32,4										
	49	205	3740	9	28,73										
	57	204	3240	9	24,42										
iC 372	49	205	3690	8	28,32										
	54	204	3860	8	26,03										
	63	203	2970	8	22,27										
	73	202	2570	8	19,31										
	78	202	2390	8	18,05										
	90	201	2010	8	15,6										
	106	198	1880	8	13,25										
	118	189	1810	8	11,83										
	138	177	1820	9	10,11										
2	148	172	1760	9	9,47										
	176	160	1720	9	7,97										
	210	145	1000	13	6,67										
	247	142	760	13	5,67										
	277	135	790	13	5,06										
	324	126	820	13	4,32										
	346	122	840	14	4,05										
	411	112	900	14	3,41										

Gear reducer						Motor size									
M_{N2max} = 335 N m n_1 = 1400 min^{-1}															
iC 473 - iC 472						63A 63B 71A 71B	80A 80B	90S 90L	100LA 112MA	112M	132S 132M	132MB	160M 160L	180M 180L	200L
	n_2 min^{-1}	M_{N2} N m	F_{r2} N	φ arc min	i										
iC 473	7,9	335	5420	7	176,88										
	8,6	335	5420	7	162,94										
	10	335	5420	7	139,99										
	11	335	5420	7	121,87										
	12	335	5420	7	114,17										
	14	335	5420	7	100,86										
	15	335	5420	7	93,68										
	16	335	5420	7	84,9										
	18	335	5420	7	76,23										
	20	335	5420	8	68,54										
3	22	335	5420	8	64,21										
	25	335	5420	8	56,73										
	27	335	5350	8	52,69										
	29	335	5140	8	47,75										
	33	335	4930	8	42,87										
	38	335	4630	8	36,93										
	40	335	4520	8	34,73										
	47	335	4240	8	29,88										
	52	335	4050	8	26,7										
	59	335	3840	8	23,59										
iC 472	41	272	4680	7	33,79										
	45	243	4610	7	31,12										
	52	335	4050	7	26,74										
	60	335	3820	7	23,28										
	64	335	3710	7	21,81										
	73	324	3530	7	19,27										
	78	315	3390	7	17,89										
	86	304	3350	7	16,22										
	96	292	3230	7	14,56										
	112	275	3080	8	12,54										
2	119	268	3020	8	11,79										
	138	252	2880	8	10,15										
	154	239	2780	8	9,07										
	175	228	2690	8	8,01										
	180	185	2720	10	7,76 (1)										
	201	180	2620	10	6,96										
	233	175	2470	10	6										
	248	175	2410	10	5,64 (1)										
	289	170	2280	11	4,85										
	323	165	2190	12	4,34										
	366	160	2080	12	3,83										

(1) Finite transmission ratio *i*

Gear reducer M_{N2max} = 500 N m n_1 = 1400 min^{-1}						Motor size									
iC 573 - iC 572	n_2 min^{-1}	M_{N2} N m	F_{r2} N	φ arc min	i	63A 63B 71A 71B	80A 80B	90S 90L	100LA 112MA	112M	132S 132M	132MB	160M 160L	180M 180L	200L
iC 573	7,5	500	7100	7	186,89										
	8,1	500	7100	7	172,17										
	9,5	500	7100	7	147,92										
	11	496	7100	7	128,77										
	12	492	7100	7	120,63										
	13	490	7100	7	106,58										
	14	488	7100	7	98,99										
	16	487	7100	7	89,71										
	17	485	7100	7	80,55										
3	20	483	7100	8	69,23										
	22	482	6980	8	64,85										
	24	480	6630	8	57,29										
	26	479	6430	8	53,22										
	29	478	6170	8	48,23										
	32	476	5900	8	43,3										
	38	474	5530	8	37,3 (1)										
	40	473	5390	8	35,07										
	46	471	5040	8	30,18										
	52	469	4800	8	26,97										
iC 572	53	469	4750	7	26,31										
	56	468	4640	7	24,99 (1)										
	64	466	4370	7	21,93										
	75	463	4050	7	18,6 (1)										
	83	462	3860	7	16,79										
	95	460	3690	7	14,77 (1)										
	100	459	3610	7	13,95 (1)										
	118	450	3430	7	11,88										
2	130	437	3330	8	10,79										
	150	412	3180	8	9,35										
	155	387	2010	9	9,06										
	176	366	2020	9	7,97										
	186	355	1950	9	7,53										
	218	335	1770	9	6,41										
	241	320	1820	10	5,82										
	277	305	1730	10	5,05										
	319	280	1900	11	4,39										

(1) Finite transmission ratio *i*

Gear reducer						Motor size									
M_{N2max} = 670 N m n_1 = 1400 min^{-1}															
iC 673 - iC 672						63A 63B 71A 71B	80A 80B	90S 90L	100LA 112MA	112M	132S 132M	132MB	160M 160L	180M 180L	200L
	n_2 min^{-1}	M_{N2} N m	F_{r2} N	φ arc min	i										
iC 673	7	670	7560	7	199,81										
	7,6	670	7560	7	184,07										
	8,9	670	7560	7	158,14										
	10	670	7560	7	137,67										
	11	670	7560	7	128,97										
	12	670	7560	7	113,94										
	13	670	7560	7	105,83										
	15	670	7560	7	95,91										
	16	670	7560	7	86,11										
	19	670	7560	7	74,17										
3	20	670	7560	7	69,75										
	23	670	7560	7	61,26										
	25	670	7560	7	56,89										
	27	668	7560	8	51,56										
	30	643	7560	8	46,29										
	35	611	7790	8	39,88 (1)										
	37	598	7900	8	37,5										
	43	567	8210	8	32,27										
	49	545	8400	8	28,83										
iC 672	50	600	8210	6	28,13										
	52	600	8210	6	26,72										
	60	630	8010	7	23,44										
	70	655	7560	7	19,89										
	78	633	7330	7	17,95										
	89	606	7130	7	15,79										
	94	590	6980	7	14,91										
	110	541	6640	7	12,7										
	121	515	6500	7	11,54										
	140	477	6220	7	10										
	161	442	5960	7	8,7 (1)										
	180	380	5830	9	7,79										
2	190	370	5790	9	7,36 (1)										
	223	330	5590	9	6,27										
	246	310	5450	10	5,7										
	284	290	5210	10	4,93										
	326	270	5000	10	4,29										

(1) Finite transmission ratio *i*

Gear reducer M_{N2max} = 925 N m n_1 = 1400 min^{-1}						Motor size									
iC 773 - iC 772	n_2 min^{-1}	M_{N2} N m	F_{r2} N	φ arc min	i	63A 63B 71A 71B	80A 80B	90S 90L	100LA 112MA	112M	132S 132M	132MB	160M 160L	180M 180L	200L
iC 773	7.2	925	9920	7	195,24 (1)										
	8.4	925	9920	7	166,59										
	9.6	925	9920	7	145,67										
	10	925	9920	7	138,39										
	12	916	9920	7	121,42										
	14	911	9920	7	102,99										
	15	908	9920	7	92,97										
	17	905	9920	7	81,8										
	18	903	9920	7	77,24										
3	21	899	9920	7	65,77										
	24	895	9920	8	57,68										
	27	892	9920	8	52,07										
	31	888	9920	8	45,81										
	32	887	9920	8	43,26										
	38	876	9920	8	36,83										
	42	849	9920	8	33,47										
	48	820	9920	8	29										
	55	780	10100	8	25,23										
iC 772	60	820	8870	7	23.37										
	65	820	8250	7	21.43										
	74	780	7980	7	18.8										
	79	780	7620	7	17.82 (1)										
	90	740	7390	7	15.6										
	100	720	7050	7	14.05										
2	114	690	6740	7	12.33										
	129	660	6490	7	10.88										
	145	630	6300	7	9.64										
	163	630	4110	8	8.59										
	181	610	3940	8	7.74										
	206	580	3850	8	6.79										
	234	540	3990	8	5.99 (1)										
	264	510	3990	9	5.31 (1)										

(1) Finite transmission ratio *i*

Gear reducer M_{N2max} = 1750 N m n_1 = 1400 min^{-1}						Motor size									
iC 873 - iC 872	n_2 min^{-1}	M_{N2} N m	F_{r2} N	φ arc min	i	63A 63B 71A 71B	80A 80B	90S 90L	100LA 112MA	112M	132S 132M	132MB	160M 160L	180M 180L	200L
iC 873	5,7	1750	16900	6	246,54										
	6,5	1750	16900	6	216,54										
	6,8	1750	16900	6	205,71										
	7,7	1750	16900	6	181,77										
	9	1750	16900	6	155,34										
	9,8	1750	16900	6	142,41										
	11	1750	16900	6	124,97										
	12	1750	16900	6	118,43 (1)										
	14	1750	16900	6	103,65										
3	15	1747	16900	6	93,38										
	17	1740	16900	6	81,92										
	19	1733	16900	7	72,57										
	22	1726	15800	7	63,68 (1)										
	23	1723	15200	7	60,35 (1)										
	27	1716	13500	7	52,82										
	29	1710	12300	7	47,58										
	34	1703	10800	7	41,74										
	38	1696	9470	7	36,84 (1)										
	43	1690	8220	7	32,66 (1)										
	50	1646	7370	7	27,88										
iC 872	41	1693	9480	6	34,4 (1)										
	45	1688	7820	6	31,4										
	50	1675	6640	6	27,84 (1)										
	60	1579	5000	6	23,4										
	65	1535	4970	6	21,51										
	73	1475	4800	6	19,1										
	82	1420	4580	6	17,08 (1)										
	91	1369	4450	6	15,35										
2	105	1305	4220	6	13,33										
	117	1257	4120	6	11,93										
	141	1180	3520	7	9,9 (1)										
	153	1210	99	7	9,14 (1)										
	170	1160	225	7	8,22										
	196	1070	820	7	7,13										
	219	1020	970	7	6,39										
	264	910	1710	7	5,3 (1)										

(1) Finite transmission ratio *i*

Gear reducer						Motor size									
M_{N2max} = 3350 N m n_1 = 1400 min^{-1}															
iC 973 - iC 972						63A 63B 71A 71B	80A 80B	90S 90L	100LA 112MA	112M	132S 132M	132MB	160M 160L	180M 180L	200L
	n_2 min^{-1}	M_{N2} N m	F_{r2} N	φ arc min	i										
iC 973	4,8	3350	19800	6	289,74										
	5,5	3350	19800	6	255,71										
	5,8	3350	19800	6	241,25										
	6,5	3350	19800	6	216,28										
	7,5	3350	19800	6	186,3										
	8,2	3350	19800	6	170,02										
	9,3	3350	19800	6	150,78										
	11	3316	19800	6	126,75										
	12	3274	19800	6	116,48										
3	14	3261	19800	6	103,44										
	15	3249	19800	6	92,48										
	17	3239	19800	6	83,15										
	19	3224	18000	6	72,17										
	21	3214	16300	7	65,21										
	23	3205	14800	7	59,92										
	26	3193	12900	7	53,21										
	29	3182	11100	7	47,58										
	33	3171	9480	7	42,78										
	38	3088	7410	7	37,13										
	42	2972	7160	7	33,25										
	51	2783	7260	7	27,58										
iC 972	44	2900	10600	6	32,05										
	51	2900	8380	6	27,19										
	56	2927	4140	6	25,03										
	63	2822	4060	6	22,37										
	70	2728	4110	6	20,14										
	77	2642	4270	6	18,24										
	87	2541	4130	6	16,17										
	96	2461	4240	6	14,62										
2	113	2335	3850	6	12,39										
	129	2237	3720	6	10,83										
	151	2184	-	6	9,29										
	167	2081	-	6	8,39										
	197	2000	-	6	7,12										
	225	1890	-	6	6,21										
	269	1780	-	7	5,2										
	311	1630	-	7	4,5 (1)										

(1) Finite transmission ratio *i*

page intentionally left blank

9.3

Selection tables [kW]

P_1 = 0,12 kW

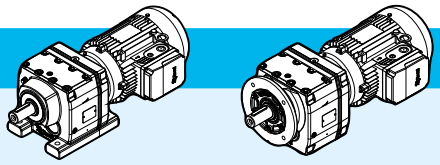

n_2 min^{-1}	M_2 N m	i	F_{r2} N	fs			kg foot HB	kg foot HBZ	kg flange HB	kg flange HBZ	p.
4,7	246	195,24 (1)	12900	3,8	**iC 773 – HB2 63 B 6 B20B**	3	45	47	52	54	156
5,5	210	166,59	13000	4,4							
6,2	183	145,67	13000	5							
4,6	252	199,81	10000	2,7	**iC 673 – HB2 63 B 6 B16B**	3	36	38	39	41	154
4,9	232	184,07	10100	2,9							
5,8	199	158,14	10200	3,4							
6,6	173	137,67	10300	3,9							
7,1	162	128,97	10300	4,1							
8,0	143	113,94	10400	4,7							
6,9	167	199,81	10300	4	**iC 673 – HB2 63 A 4 B16B**	3	36	38	39	41	154
7,4	154	184,07	10400	4,4							
4,9	235	186,89	7760	2,1	**iC 573 – HB2 63 B 6 B16B**	3	28	29	31	33	152
5,3	217	172,17	7800	2,3							
6,2	186	147,92	7860	2,7							
7,1	162	128,77	7900	3,1							
7,5	152	120,63	7920	3,3							
8,5	134	106,58	7940	3,7							
9,2	125	98,99	7950	4							
7,3	156	186,89	7920	3,2	**iC 573 – HB2 63 A 4 B16B**	3	27	29	30	32	152
8,0	144	172,17	7940	3,5							
9,3	124	147,92	7960	4							
11	108	128,77	7980	4,6							
5,1	223	176,88	5730	1,5	**iC 473 – HB2 63 B 6 B16B**	3	21	23	22	24	150
5,6	205	162,94	5800	1,65							
6,5	176	139,99	5900	1,9							
7,5	153	121,87	5970	2,2							
7,7	148	176,88	6000	2,3	**iC 473 – HB2 63 A 4 B16B**	3	21	23	22	24	150
8,4	136	162,94	6030	2,5							
9,8	117	139,99	6070	2,9							
11	102	121,87	6100	3,3							
12	96	114,17	6100	3,5							
14	84	100,86	6120	4							
15	78	93,68	6130	4,3							
6,7	170	134,82	4870	1,3	**iC 373 – HB2 63 B 6 B12B**	3	15	17	17	19	148
7,4	156	123,66	5290	1,45							
8,6	133	105,28	5560	1,7							
10	114	90,77	5700	1,9							
11	107	84,61	5750	2							
12	93	73,96	5830	2,3							

(1) Finite transmission ratio *i*

P_1 = 0,12 kW

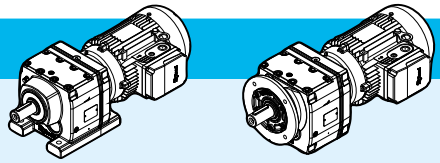

n_2 min^{-1}	M_2 N m	i	F_{r2} N	fs			kg foot HB	kg foot HBZ	kg flange HB	kg flange HBZ	p.
10	113	134,82	5750	1,95	**iC 373 – HB2 63 A 4 B12B**	3	14	16	16	18	148
11	103	123,66	5800	2,1							
13	88	105,28	5880	2,4							
15	76	90,77	5930	2,8							
16	71	84,61	5950	3							
19	62	73,96	5980	3,4							
7,3	156	123,91	2660	0,95	**iC 273 – HB2 63 B 6 B12B**	3	14	16	16	18	146
8,6	133	105,49	3300	1,1							
10	115	90,96	3800	1,25							
11	107	84,78	3990	1,35							
12	93	74,11	4060	1,55							
10	113	135,09	3990	1,3	**iC 273 – HB2 63 A 4 B12B**	3	13	15	13	15	146
11	104	123,91	4040	1,4							
13	88	105,49	4110	1,65							
15	76	90,96	4170	1,9							
16	71	84,78	4200	2							
18	62	74,11	4240	2,3							
20	58	69,47	4260	2,4							
22	51	61,3	4290	2,8							
25	47	55,87	4280	3							
28	40	48,17	4090	3,5							
31	38	44,9	4000	3,7							

P_1 = 0,18 kW

4,7	369	195,24 (1)	12600	2,5	**iC 773 – HB2 71 A 6 B20B**	3	45	47	51	54	156
5,5	315	166,59	12800	2,9							
6,2	275	145,67	12900	3,4							
6,6	261	138,39	12900	3,5							
7,5	229	121,42	13000	4							
7,0	247	195,24 (1)	12900	3,7	**iC 773 – HB2 63 B 4 B20B**	3	45	47	51	54	156
8,2	211	166,59	13000	4,4							
9,3	184	145,67	13000	5							
9,8	175	138,39	13000	5,3							
4,6	377	199,81	9490	1,8	**iC 673 – HB2 71 A 6 B16B**	3	38	40	40	43	154
4,9	348	184,07	9660	1,95							
5,8	299	158,14	9900	2,2							
6,6	260	137,67	10100	2,6							
7,1	244	128,97	10100	2,8							
8,0	215	113,94	10200	3,1							
8,6	200	105,83	10300	3,4							
9,5	181	95,91	10300	3,7							
11	163	86,11	10400	4,1							
12	140	74,17	10400	4,8							
13	132	69,75	10400	5,1							

(1) Finite transmission ratio *i*

P_1 = 0,18 kW

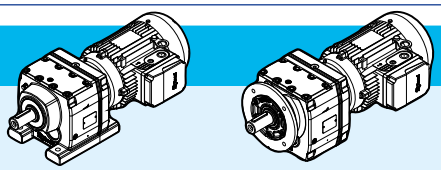

n_2 min^{-1}	M_2 N m	i	F_{r2} N	fs			kg foot HB	kg foot HBZ	kg flange HB	kg flange HBZ	p.
6,8	253	199,81	10100	2,7	**iC 673 – HB2 63 B 4 B16B**	3	36	38	39	40	154
7,4	233	184,07	10200	2,9							
8,6	200	158,14	10300	3,4							
9,9	174	137,67	10300	3,9							
11	163	128,97	10400	4,1							
12	144	113,94	10400	4,7							
13	134	105,83	10400	5							
4,9	353	186,89	7480	1,4	**iC 573 – HB2 71 A 6 B16B**	3	29	32	32	35	152
5,3	325	172,17	7560	1,55							
6,2	279	147,92	7690	1,8							
7,1	243	128,77	7770	2,1							
7,5	228	120,63	7800	2,2							
7,3	236	186,89	7790	2,1	**iC 573 – HB2 63 B 4 B16B**	3	28	29	31	33	152
7,9	218	172,17	7820	2,3							
9,2	187	147,92	7880	2,7							
11	163	128,77	7910	3							
11	152	120,63	7930	3,2							
13	135	106,58	7950	3,6							
14	125	98,99	7960	3,9							
15	113	89,71	7970	4,3							
7,7	224	176,88	5780	1,5	**iC 473 – HB2 63 B 4 B16B**	3	21	23	22	24	150
8,3	206	162,94	5840	1,65							
9,7	177	139,99	5930	1,9							
11	154	121,87	5990	2,2							
12	144	114,17	6010	2,3							
13	127	100,86	6050	2,6							
15	118	93,68	6070	2,8							
16	107	84,9	6090	3,1							
18	96	76,23	6100	3,5							
7,4	234	123,66	3330	0,95	**iC 373 – HB2 71 A 6 B12B**	3	16	19	18	21	148
8,6	199	105,28	4300	1,15							
10	171	90,77	5070	1,3							
11	160	84,61	5390	1,35							
10	170	134,82	5130	1,3	**iC 373 – HB2 63 B 4 B12B**	3	15	17	17	19	148
11	156	123,66	5430	1,35							
13	133	105,28	5620	1,6							
15	115	90,77	5740	1,85							
16	107	84,61	5780	2							
18	93	73,96	5860	2,3							
20	88	69,33	5880	2,4							
22	77	61,18	5930	2,7							
24	70	55,76	5950	3							
28	61	48,08	5890	3,4							

(1) Finite transmission ratio *i*

P_1 = 0,18 kW

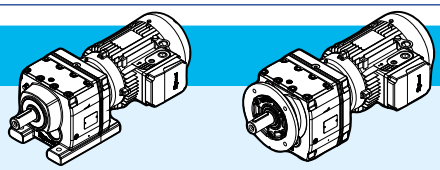

n_2 min^{-1}	M_2 N m	i	F_{r2} N	fs			kg foot HB	kg foot HBZ	kg flange HB	kg flange HBZ	p.
11	157	123,91	2880	0,9	**iC 273 – HB2 63 B 4 B12B**	3	14	15	14	16	146
13	133	105,49	3490	1,1							
15	115	90,96	3960	1,25							
16	107	84,78	4020	1,35							
18	94	74,11	4090	1,5							
20	88	69,47	4110	1,6							
22	77	61,3	4160	1,85							
24	71	55,87	4170	2							
28	61	48,17	4000	2,3							
30	57	44,9	3920	2,5							
35	50	39,25	3770	2,8							
37	47	36,79	3700	3							
42	41	32,47	3560	3,4							
47	36	28,78	3440	3,8							
56	31	24,47	3270	4,4							
48	36	28,37	3420	3,9	**iC 272 – HB2 63 B 4 B12B**	2	14	15	14	16	146
52	33	26,09	3340	4,2							
61	28	22,32	3180	4,9							
70	24	19,35	3050	5,6							
75	23	18,08	2980	6							
87	20	15,63	2850	6,9							
102	17	13,28 (1)	2710	8							

P_1 = 0,25 kW

4,6	518	195,24 (1)	12000	1,8	**iC 773 – HB2 71 B 6 B20B**	3	46	48	52	55	156
5,4	442	166,59	12400	2,1							
6,2	386	145,67	12600	2,4							
7,2	333	195,24 (1)	12700	2,8	**iC 773 – HB2 71 A 4 B20B**	3	44	47	51	54	156
8,4	284	166,59	12800	3,3							
9,6	248	145,67	12900	3,7							
10	236	138,39	13000	3,9							
12	207	121,42	13000	4,4							
4,5	530	199,81	8390	1,25	**iC 673 – HB2 71 B 6 B16B**	3	38	41	41	44	154
4,9	488	184,07	8750	1,35							
5,7	420	158,14	9250	1,6							
6,5	365	137,67	9580	1,85							
7,0	342	128,97	9700	1,95							
7,9	302	113,94	9900	2,2							
8,5	281	105,83	9990	2,4							
7,0	341	199,81	9690	1,95	**iC 673 – HB2 71 A 4 B16B**	3	37	40	40	43	154
7,6	314	184,07	9820	2,1							
8,9	270	158,14	10000	2,5							

(1) Finite transmission ratio *i*

P_1 = 0,25 kW

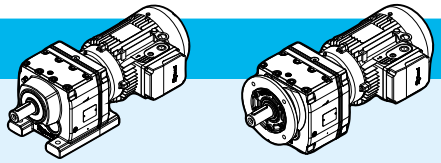

n_2 min^{-1}	M_2 N m	i	F_{r2} N	fs			kg foot HB	kg foot HBZ	kg flange HB	kg flange HBZ	p.
10	235	137,67	10100	2,9	**iC 673 – HB2 71 A 4 B16B**	3	37	40	40	43	154
11	220	128,97	10200	3							
12	194	113,94	10300	3,4							
13	180	105,83	10300	3,7							
15	164	95,91	10400	4,1							
16	147	86,11	10400	4,6							
4,8	496	186,89	6390	1	**iC 573 – HB2 71 B 6 B16B**	3	30	32	33	36	152
5,2	457	172,17	7110	1,1							
6,1	392	147,92	7360	1,25							
7,0	342	128,77	7520	1,45							
7,5	320	120,63	7590	1,55							
8,4	283	106,58	7690	1,75							
9,1	263	98,99	7730	1,9							
7,5	319	186,89	7580	1,55	**iC 573 – HB2 71 A 4 B16B**	3	29	31	32	35	152
8,1	294	172,17	7650	1,7							
9,5	252	147,92	7750	2							
11	220	128,77	7820	2,3							
12	206	120,63	7840	2,4							
13	182	106,58	7880	2,7							
14	169	98,99	7900	2,9							
16	153	89,71	7920	3,2							
17	137	80,55	7940	3,5							
20	118	69,23	7960	4,1							
7,9	302	176,88	4980	1,1	**iC 473 – HB2 71 A 4 B16B**	3	22	25	23	26	150
8,6	278	162,94	5540	1,2							
10	239	139,99	5710	1,4							
11	208	121,87	5830	1,6							
12	195	114,17	5870	1,7							
14	172	100,86	5940	1,95							
15	160	93,68	5970	2,1							
16	145	84,9	6010	2,3							
18	130	76,23	6040	2,6							
20	117	68,54	6070	2,9							
22	110	64,21	6080	3,1							
25	97	56,73	6100	3,5							
27	90	52,69	6110	3,7							
29	81	47,75	5940	4,1							
10	230	134,82	3420	0,95	**iC 373 – HB2 71 A 4 B12B**	3	16	19	18	21	148
11	211	123,66	3950	1							
13	180	105,28	4840	1,2							
15	155	90,77	5430	1,35							
17	144	84,61	5520	1,45							
19	126	73,96	5660	1,65							
20	118	69,33	5710	1,8							

P_1 = 0,25 kW

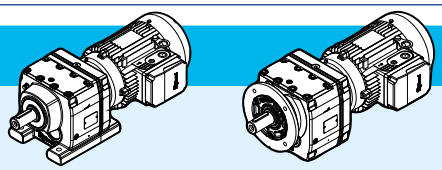

n_2 min^{-1}	M_2 N m	i	F_{r2} N	fs			kg foot HB	kg foot HBZ	kg flange HB	kg flange HBZ	p.
23	104	61,18	5800	2	**iC 373 – HB2 71 A 4 B12B**	3	16	19	18	21	148
25	95	55,76	5840	2,2							
29	82	48,08	5740	2,5							
31	76	44,81	5630	2,7							
36	67	39,17	5410	3,1							
38	63	36,72	5310	3,3							
43	55	32,4	5110	3,7							
17	145	84,78	3160	1	**iC 273 – HB2 71 A 4 B12B**	3	15	17	15	18	146
19	126	74,11	3640	1,15							
20	118	69,47	3850	1,2							
23	105	61,3	4030	1,35							
25	95	55,87	4010	1,5							
29	82	48,17	3860	1,7							
31	77	44,9	3790	1,85							
36	67	39,25	3650	2,1							
38	63	36,79	3590	2,2							
43	55	32,47	3460	2,5							
49	49	28,78	3350	2,8							
57	42	24,47	3200	3,3							
49	48	28,37	3340	2,9	**iC 272 – HB2 71 A 4 B12B**	2	15	17	15	18	146
54	44	26,09	3260	3,1							
63	38	22,32	3110	3,6							
72	33	19,35	2980	4,1							
77	31	18,08	2920	4,4							
90	27	15,63	2800	5,1							
105	23	13,28 (1)	2660	6							
118	20	11,86	2570	6,6							
138	17	10,13	2450	7,7							
149	16	9,41	2380	7,6							
172	14	8,16	2280	8,9							
184	13	7,63 (1)	2230	9,2							
212	11	6,59	2130	9,8							
250	10	5,6 (1)	2020	11							
280	9	5 (1)	1950	11							
328	7	4,27	1860	12							
350	6,8	4 (1)	1820	13							
415	6	3,37	1720	14							

(1) Finite transmission ratio *i*

P_1 = 0,37 kW

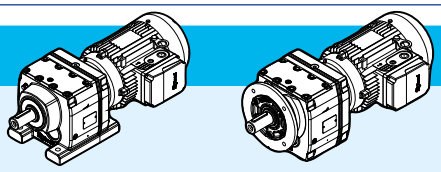

n_2 min^{-1}	M_2 N m	i	F_{r2} N	fs			kg foot HB	kg foot HBZ	kg flange HB	kg flange HBZ	p.
3,2	1101	289,74	28100	3	**iC 973 – HB2 80 A 6 B30C**	3	134	138	150	154	160
3,6	972	255,71	28300	3,4							
3,9	917	241,25	28300	3,7							
4,3	822	216,28	28400	4,1							
3,8	937	246,54	20000	1,85	**iC 873 – HB2 80 A 6 B25C**	3	81	85	89	93	158
4,3	823	216,54	20000	2,1							
4,5	782	205,71	20000	2,2							
5,1	691	181,77	20000	2,5							
6,0	590	155,34	20000	3							
6,5	541	142,41	20000	3,2							
5,6	633	166,59	11400	1,45	**iC 773 – HB2 80 A 6 B20C**	3	47	51	53	57	156
6,4	553	145,67	11800	1,65							
6,7	526	138,39	12000	1,75							
7,2	493	195,24 (1)	12100	1,9	**iC 773 – HB2 71 B 4 B20B**	3	45	48	52	55	156
8,4	420	166,59	12400	2,2							
9,6	368	145,67	12600	2,5							
10	349	138,39	12700	2,6							
12	306	121,42	12800	3							
14	260	102,99	12900	3,5							
15	235	92,97	13000	3,9							
5,9	601	158,14	7590	1,1	**iC 673 – HB2 80 A 6 B16C**	3	40	44	42	46	154
6,8	523	137,67	8400	1,3							
7,2	490	128,97	8690	1,35							
8,2	433	113,94	9130	1,55							
7,0	504	199,81	8590	1,35	**iC 673 – HB2 71 B 4 B16B**	3	38	41	41	44	154
7,6	465	184,07	8910	1,45							
8,9	399	158,14	9370	1,7							
10	347	137,67	9670	1,95							
11	326	128,97	9780	2,1							
12	288	113,94	9950	2,3							
13	267	105,83	10000	2,5							
15	242	95,91	10100	2,8							
16	217	86,11	10200	3,1							
19	187	74,17	10300	3,6							
20	176	69,75	10300	3,8							
23	155	61,26	10400	4,3							
25	144	56,89	10400	4,7							
7,2	489	128,77	6410	1	**iC 573 – HB2 80 A 6 B16C**	3	31	35	34	38	152
7,7	458	120,63	7000	1,1							
8,7	405	106,58	7300	1,25							
9,4	376	98,99	7400	1,35							
7,5	472	186,89	6790	1,05	**iC 573 – HB2 71 B 4 B16B**	3	30	32	33	35	152
8,1	435	172,17	7190	1,15							
9,5	373	147,92	7420	1,35							

(1) Finite transmission ratio *i*

P_1 = 0,37 kW

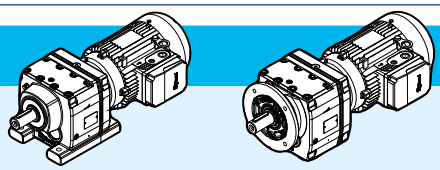

n_2 min^{-1}	M_2 N m	i	F_{r2} N	fs			kg foot HB	kg foot HBZ	kg flange HB	kg flange HBZ	p.
11	325	128,77	7570	1,55	**iC 573 – HB2 71 B 4 B16B**	3	30	32	33	35	152
12	304	120,63	7630	1,6							
13	269	106,58	7720	1,8							
14	250	98,99	7760	1,95							
16	226	89,71	7810	2,2							
17	203	80,55	7850	2,4							
20	175	69,23	7900	2,8							
22	164	64,85	7910	2,9							
24	145	57,29	7700	3,3							
26	134	53,22	7540	3,6							
29	122	48,23	7320	3,9							
10	353	139,99	3770	0,95	**iC 473 – HB2 71 B 4 B16B**	3	23	26	24	27	150
11	308	121,87	4880	1,1							
12	288	114,17	5360	1,15							
14	255	100,86	5650	1,3							
15	236	93,68	5730	1,4							
16	214	84,9	5810	1,55							
18	192	76,23	5880	1,75							
20	173	68,54	5940	1,95							
22	162	64,21	5970	2,1							
25	143	56,73	6020	2,3							
27	133	52,69	5940	2,5							
29	121	47,75	5780	2,8							
33	108	42,87	5610	3,1							
38	93	36,93	5370	3,6							
40	88	34,73	5280	3,8							
41	85	33,79	5230	3,2	**iC 472 – HB2 71 B 4 B16B**	2	23	26	24	27	150
45	79	31,12	5110	3,1							
52	67	26,74	4880	5							
60	59	23,28	4680	5,7							
64	55	21,81	4590	6,1							
15	229	90,77	3480	0,95	**iC 373 – HB2 71 B 4 B12B**	3	17	19	19	21	148
17	214	84,61	3920	1							
19	187	73,96	4670	1,15							
20	175	69,33	5000	1,2							
23	154	61,18	5450	1,35							
25	141	55,76	5560	1,5							
29	121	48,08	5550	1,7							
31	113	44,81	5440	1,85							
36	99	39,17	5250	2,1							
38	93	36,72	5160	2,2							
43	82	32,4	4980	2,5							
49	73	28,73	4810	2,8							
57	62	24,42	4590	3,3							

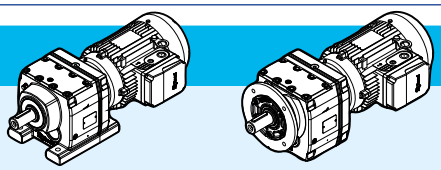

P_1 = 0,37 kW

n_2 min^{-1}	M_2 N m	i	F_{r2} N	fs			kg foot HB	kg foot HBZ	kg flange HB	kg flange HBZ	p.
49	71	28,32	4790	2,9	**iC 372 – HB2 71 B 4 B12B**	2	17	19	19	21	148
54	66	26,03	4680	3,1							
63	56	22,27	4470	3,6							
73	49	19,31	4280	4,2							
78	46	18,05	4200	4,4							
90	39	15,6	4020	5,1							
106	33	13,25	3820	5,9							
118	30	11,83	3690	6,3							
23	155	61,3	2930	0,9	**iC 273 – HB2 71 B 4 B12B**	3	16	18	16	19	146
25	141	55,87	3280	1							
29	122	48,17	3660	1,15							
31	113	44,9	3600	1,25							
36	99	39,25	3490	1,4							
38	93	36,79	3430	1,5							
43	82	32,47	3330	1,7							
49	73	28,78	3230	1,9							
57	62	24,47	3090	2,2							
49	72	28,37	3220	1,95	**iC 272 – HB2 71 B 4 B12B**	2	16	18	16	19	146
54	66	26,09	3140	2,1							
63	56	22,32	3020	2,4							
72	49	19,35	2900	2,8							
77	46	18,08	2840	3							
90	39	15,63	2730	3,4							
105	34	13,28 (1)	2600	4							

P_1 = 0,55 kW

3,2	1654	289,74	27500	2	**iC 973 – HB2 80 B 6 B30C**	3	136	140	152	156	160
3,6	1460	255,71	27800	2,3							
3,8	1377	241,25	27900	2,4							
4,3	1235	216,28	28000	2,7							
4,8	1083	289,74	28200	3,1	**iC 973 – HB2 80 A 4 B30C**	3	134	138	150	154	160
5,5	956	255,71	28300	3,5							
5,8	902	241,25	28300	3,7							
6,5	809	216,28	28400	4,1							
3,7	1408	246,54	15600	1,25	**iC 873 – HB2 80 B 6 B25C**	3	83	87	91	95	158
4,2	1236	216,54	17900	1,4							
4,5	1174	205,71	18800	1,5							
5,1	1038	181,77	19900	1,7							
5,9	887	155,34	20000	1,95							
5,7	922	246,54	20000	1,9	**iC 873 – HB2 80 A 4 B25C**	3	81	85	89	93	158
6,5	810	216,54	20000	2,2							
6,8	769	205,71	20000	2,3							
7,7	680	181,77	20000	2,6							

(1) Finite transmission ratio *i*

P_1 = 0,55 kW

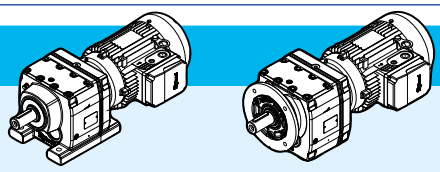

n_2 min^{-1}	M_2 N m	i	F_{r2} N	fs			kg foot HB	kg foot HBZ	kg flange HB	kg flange HBZ	p.
9,0	581	155,34	20000	3	**iC 873 – HB2 80 A 4 B25C**	3	81	85	89	93	158
9,9	532	142,41	20000	3,3							
11	467	124,97	20000	3,7							
12	443	118,43 (1)	20000	4							
14	387	103,65	20000	4,5							
8,4	623	166,59	11500	1,5	**iC 773 – HB2 80 A 4 B20C**	3	46	50	53	57	156
9,6	545	145,67	11900	1,7							
10	517	138,39	12000	1,8							
12	454	121,42	12300	2							
14	385	102,99	12600	2,4							
15	348	92,97	12700	2,6							
17	306	81,8	12800	3							
18	289	77,24	12800	3,1							
21	246	65,77	12900	3,7							
8,9	591	158,14	7800	1,15	**iC 673 – HB2 80 A 4 B16C**	3	39	43	42	46	154
10	515	137,67	8550	1,3							
11	482	128,97	8820	1,4							
12	426	113,94	9220	1,55							
13	396	105,83	9420	1,7							
15	359	95,91	9630	1,85							
16	322	86,11	9810	2,1							
19	277	74,17	10000	2,4							
20	261	69,75	10100	2,6							
23	229	61,26	10200	2,9							
25	213	56,89	10200	3,2							
12	451	120,63	7140	1,1	**iC 573 – HB2 80 A 4 B16C**	3	31	34	34	38	152
13	398	106,58	7340	1,25							
14	370	98,99	7440	1,3							
16	335	89,71	7550	1,45							
17	301	80,55	7640	1,6							
20	259	69,23	7740	1,85							
22	242	64,85	7670	2							
25	214	57,29	7420	2,2							
26	199	53,22	7280	2,4							
29	180	48,23	7090	2,6							
32	162	43,3	6880	2,9							
38	139	37,3 (1)	6600	3,4							
40	131	35,07	6480	3,6							
53	98	26,31	5960	4,8	**iC 572 – HB2 80 A 4 B16C**	2	30	33	33	37	152
56	93	24,99 (1)	5870	5							
64	82	21,93	5650	5,7							
76	70	18,6 (1)	5380	6,7							
15	350	93,68	3940	0,95	**iC 473 – HB2 80 A 4 B16C**	3	24	28	25	29	150
17	317	84,9	4730	1,05							

(1) Finite transmission ratio *i*

P_1 = 0,55 kW

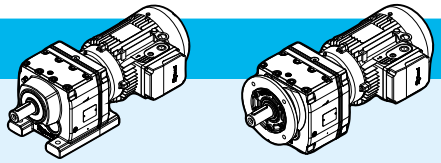

n_2 min^{-1}	M_2 N m	i	F_{r2} N	fs			kg foot HB	kg foot HBZ	kg flange HB	kg flange HBZ	p.
18	285	76,23	5510	1,2	**iC 473 – HB2 80 A 4 B16C**	3	24	28	25	29	150
20	256	68,54	5660	1,3							
22	240	64,21	5720	1,4							
25	212	56,73	5800	1,6							
27	197	52,69	5690	1,7							
29	179	47,75	5550	1,9							
33	160	42,87	5400	2,1							
38	138	36,93	5190	2,4							
40	130	34,73	5100	2,6							
47	112	29,88	4890	3							
53	100	26,74	4740	3,4	**iC 472 – HB2 80 A 4 B16C**	2	24	28	25	29	150
60	87	23,28	4560	3,8							
64	82	21,81	4470	4,1							
23	229	61,18	3560	0,9	**iC 373 – HB2 80 A 4 B12C**	3	18	22	20	24	148
25	208	55,76	4120	1							
29	180	48,08	4920	1,15							
31	168	44,81	5170	1,25							
36	146	39,17	5010	1,4							
38	137	36,72	4930	1,5							
43	121	32,4	4780	1,7							
49	107	28,73	4630	1,9							
58	91	24,42	4430	2,2							
63	83	22,27	4320	2,5	**iC 372 – HB2 80 A 4 B12C**	2	18	22	20	24	148
73	72	19,31	4160	2,8							
78	67	18,05	4080	3							
90	58	15,6	3910	3,5							
106	50	13,25	3730	4							
119	44	11,83	3610	4,3							
36	147	39,25	3180	0,95	**iC 273 – HB2 80 A 4 B12C**	3	17	20	17	21	146
38	138	36,79	3210	1							
43	121	32,47	3130	1,15							
49	108	28,78	3050	1,3							
57	91	24,47	2940	1,5							
63	83	22,32	2870	1,65	**iC 272 – HB2 80 A 4 B12C**	2	17	20	17	21	146
73	72	19,35	2770	1,9							
78	68	18,08	2730	2							
90	58	15,63	2630	2,3							
106	50	13,28 (1)	2520	2,7							
118	44	11,86	2440	3							
139	38	10,13	2330	3,5							
149	35	9,41	2260	3,5							
172	30	8,16	2170	4							

(1) Finite transmission ratio *i*

P_1 = 0,55 kW

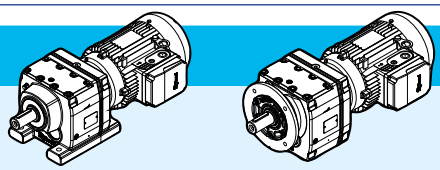

n_2 min^{-1}	M_2 N m	i	F_{r2} N	fs			kg foot HB	kg foot HBZ	kg flange HB	kg flange HBZ	p.
184	29	7,63 (1)	2130	4,2	**iC 272 – HB2 80 A 4 B12C**	2	17	20	17	21	146
213	25	6,59	2040	4,5							
251	21	5,6 (1)	1950	4,9							
281	19	5 (1)	1880	5,2							
329	16	4,27	1800	5,6							
351	15	4 (1)	1760	5,8							
417	13	3,37	1670	6,4							

P_1 = 0,75 kW

3,6	1969	255,71	25900	1,7	**iC 973 – HB3 90 S 6 B30D**	3	142	146	158	162	158
3,9	1858	241,25	27100	1,8							
4,3	1666	216,28	27500	2							
4,9	1472	289,74	27700	2,3	**iC 973 – HB3 80 B 4 B30C**	3	138	142	154	158	158
5,5	1299	255,71	27900	2,6							
5,8	1226	241,25	28000	2,7							
6,5	1099	216,28	28200	3							
7,6	946	186,3	28300	3,5							
8,3	864	170,02	28400	3,9							
4,3	1668	216,54	11500	1,05	**iC 873 – HB3 90 S 6 B25D**	3	89	93	97	101	158
4,5	1584	205,71	12700	1,1							
5,1	1400	181,77	15300	1,25							
6,0	1196	155,34	18100	1,45							
6,5	1097	142,41	19500	1,6							
5,7	1252	246,54	18800	1,4	**iC 873 – HB3 80 B 4 B25C**	3	85	89	93	97	158
6,5	1100	216,54	19500	1,6							
6,9	1045	205,71	19700	1,65							
7,8	923	181,77	20000	1,9							
9,1	789	155,34	20000	2,2							
9,9	723	142,41	20000	2,4							
11	635	124,97	20000	2,8							
12	602	118,43 (1)	20000	2,9							
14	527	103,65	20000	3,3							
15	474	93,38	20000	3,7							
8,5	846	166,59	9840	1,1	**iC 773 – HB3 80 B 4 B20C**	3	51	55	57	61	156
9,7	740	145,67	10700	1,25							
10	703	138,39	11000	1,3							
12	617	121,42	11500	1,5							
14	523	102,99	12000	1,75							
15	472	92,97	12200	1,9							
17	416	81,8	12500	2,2							
18	392	77,24	12500	2,3							
21	334	65,77	12700	2,7							

(1) Finite transmission ratio *i*

P_1 = 0,75 kW

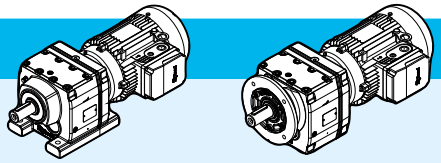

n_2 min^{-1}	M_2 N m	i	F_{r2} N	fs			kg foot HB	kg foot HBZ	kg flange HB	kg flange HBZ	p.
24	293	57,68	12800	3,1	**iC 773 – HB3 80 B 4 B20C**	3	51	55	57	61	156
27	265	52,07	12900	3,4							
31	233	45,81	13000	3,8							
33	220	43,26	13000	4							
11	655	128,97	7030	1	**iC 673 – HB3 80 B 4 B16C**	3	44	48	46	50	154
12	579	113,94	7940	1,15							
13	538	105,83	8340	1,25							
15	487	95,91	8780	1,4							
16	437	86,11	9150	1,55							
19	377	74,17	9530	1,8							
20	354	69,75	9650	1,9							
23	311	61,26	9860	2,2							
25	289	56,89	9960	2,3							
27	262	51,56	10100	2,5							
30	235	46,29	10200	2,7							
13	541	106,58	5570	0,9	**iC 573 – HB3 80 B 4 B16C**	3	35	39	38	42	152
14	503	98,99	6910	0,95							
16	456	89,71	7120	1,05							
18	409	80,55	7300	1,2							
20	352	69,23	7460	1,35							
22	329	64,85	7360	1,45							
25	291	57,29	7150	1,65							
26	270	53,22	7020	1,75							
29	245	48,23	6850	1,95							
33	220	43,3	6670	2,2							
38	189	37,3 (1)	6410	2,5							
40	178	35,07	6310	2,7							
47	153	30,18	6060	3,1							
52	137	26,97	5870	3,4							
54	134	26,31	5830	3,5	**iC 572 – HB3 80 B 4 B16C**	2	34	38	37	41	152
56	127	24,99 (1)	5750	3,7							
64	111	21,93	5540	4,2							
76	94	18,6 (1)	5280	4,9							
21	348	68,54	4530	0,95	**iC 473 – HB3 80 B 4 B16C**	3	29	33	30	34	150
22	326	64,21	5310	1,05							
25	288	56,73	5510	1,15							
27	268	52,69	5430	1,25							
30	243	47,75	5320	1,4							
33	218	42,87	5180	1,55							
38	188	36,93	5000	1,8							
41	176	34,73	4930	1,9							
47	152	29,88	4740	2,2							
53	136	26,7	4610	2,5							
60	120	23,59	4460	2,8							

(1) Finite transmission ratio *i*

P_1 = 0,75 kW

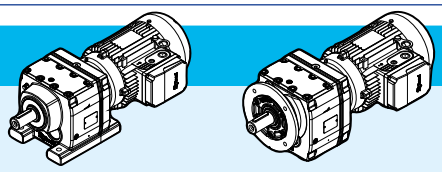

n_2 min^{-1}	M_2 N m	i	F_{r2} N	fs			kg foot HB	kg foot HBZ	kg flange HB	kg flange HBZ	p.
53	136	26,74	4610	2,5	**iC 472 – HB3 80 B 4 B16C**	2	29	33	30	34	150
61	118	23,28	4440	2,8							
65	111	21,81	4360	3							
73	98	19,27	4220	3,3							
79	91	17,89	4130	3,5							
87	82	16,22	4020	3,7							
29	244	48,08	3630	0,85	**iC 373 – HB3 80 B 4 B12C**	3	22	26	24	28	148
31	228	44,81	4490	0,9							
36	199	39,17	4760	1,05							
38	187	36,72	4690	1,1							
44	165	32,4	4570	1,25							
49	146	28,73	4440	1,4							
58	124	24,42	4280	1,65							
63	113	22,27	4180	1,8	**iC 372 – HB3 80 B 4 B12C**	2	22	26	24	28	148
73	98	19,31	4030	2,1							
78	92	18,05	3960	2,2							
90	79	15,6	3810	2,6							
106	67	13,25	3640	2,9							
119	60	11,83	3530	3,1							
139	51	10,11	3380	3,4							
149	48	9,47	3310	3,6							
49	146	28,78	2860	0,95	**iC 273 – HB3 80 B 4 B12C**	3	21	25	21	25	146
58	124	24,47	2770	1,1							
63	113	22,32	2720	1,2	**iC 272 – HB3 80 B 4 B12C**	2	21	25	21	25	146
73	98	19,35	2640	1,4							
78	92	18,08	2610	1,5							
90	79	15,63	2520	1,7							
106	67	13,28 (1)	2430	2							
119	60	11,86	2360	2,2							
139	51	10,13	2260	2,6							
150	48	9,41	2180	2,6							
173	41	8,16	2110	3							
185	39	7,63 (1)	2070	3,1							
214	33	6,59	1990	3,3							
252	28	5,6 (1)	1900	3,6							
282	25	5 (1)	1840	3,8							

(1) Finite transmission ratio *i*

P_1 = 1,1 kW

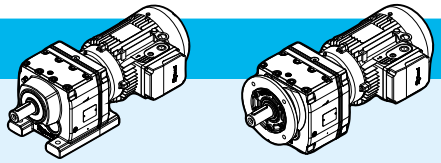

n_2 min^{-1}	M_2 N m	i	F_{r2} N	fs			kg foot HB	kg foot HBZ	kg flange HB	kg flange HBZ	p.
4,3	2443	216,28	20500	1,35	**iC 973 – HB3 90 L 6 B30D**	3	146	152	162	168	160
5,0	2104	186,3	24300	1,6							
5,6	1892	255,71	27000	1,75	**iC 973 – HB3 90 S 4 B30D**	3	145	149	161	165	160
5,9	1785	241,25	27300	1,9							
6,6	1600	216,28	27600	2,1							
7,6	1378	186,3	27900	2,4							
8,4	1258	170,02	28000	2,7							
9,4	1115	150,78	28100	3							
11	938	126,75	28300	3,5							
12	862	116,48	28400	3,8							
6,6	1602	216,54	16800	1,1	**iC 873 – HB3 90 S 4 B25D**	3	92	96	100	104	158
6,9	1522	205,71	17400	1,15							
7,8	1345	181,77	18400	1,3							
9,1	1149	155,34	19300	1,5							
10,0	1054	142,41	19700	1,65							
11	924	124,97	20000	1,9							
12	876	118,43 (1)	20000	2							
14	767	103,65	20000	2,3							
15	691	93,38	20000	2,5							
17	606	81,92	20000	2,9							
20	537	72,57	20000	3,2							
22	471	63,68 (1)	20000	3,7							
24	446	60,35 (1)	20000	3,9							
27	391	52,82	20000	4,4							
12	898	121,42	9360	1	**iC 773 – HB3 90 S 4 B20D**	3	57	61	64	68	156
14	762	102,99	10600	1,2							
15	688	92,97	11100	1,3							
17	605	81,8	11600	1,5							
18	571	77,24	11800	1,6							
22	487	65,77	12200	1,85							
25	427	57,68	12400	2,1							
27	385	52,07	12600	2,3							
31	339	45,81	12700	2,6							
33	320	43,26	12800	2,8							
39	272	36,83	12900	3,2							
42	248	33,47	12900	3,4							
16	637	86,11	7290	1,05	**iC 673 – HB3 90 S 4 B16D**	3	50	54	53	57	154
19	549	74,17	8260	1,2							
20	516	69,75	8550	1,3							
23	453	61,26	9050	1,5							
25	421	56,89	9270	1,6							
28	381	51,56	9510	1,75							
31	342	46,29	9720	1,9							
36	295	39,88 (1)	9940	2,1							

(1) Finite transmission ratio *i*

P_1 = 1,1 kW

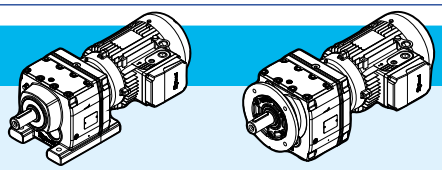

n_2 min^{-1}	M_2 N m	i	F_{r2} N	fs			kg foot HB	kg foot HBZ	kg flange HB	kg flange HBZ	p.
38	277	37,5	10000	2,2	**iC 673 – HB3 90 S 4 B16D**	3	50	54	53	57	154
44	239	32,27	10200	2,4							
49	213	28,83	10200	2,6							
50	208	28,13	10100	2,8	**iC 672 – HB3 90 S 4 B16D**	2	49	53	52	56	154
53	198	26,72	10000	2,8							
61	173	23,44	9620	3,6							
71	147	19,89	9160	4,5							
21	512	69,23	6720	0,95	**iC 573 – HB3 90 S 4 B16D**	3	42	46	45	49	152
22	480	64,85	6800	1							
25	424	57,29	6660	1,15							
27	394	53,22	6560	1,2							
29	357	48,23	6440	1,35							
33	320	43,3	6290	1,5							
38	276	37,3 (1)	6090	1,7							
40	259	35,07	6000	1,8							
47	223	30,18	5790	2,1							
53	199	26,97	5630	2,4							
54	195	26,31	5600	2,4	**iC 572 – HB3 90 S 4 B16D**	2	41	45	44	48	152
57	185	24,99 (1)	5530	2,5							
65	162	21,93	5340	2,9							
76	138	18,6 (1)	5110	3,4							
85	124	16,79	4970	3,7							
30	353	47,75	4310	0,95	**iC 473 – HB3 90 S 4 B16D**	3	35	39	36	40	150
33	317	42,87	4810	1,05							
38	273	36,93	4680	1,25							
41	257	34,73	4620	1,3							
48	221	29,88	4480	1,5							
53	198	26,7	4370	1,7							
60	175	23,59	4250	1,9							
61	172	23,28	4240	1,95	**iC 472 – HB3 90 S 4 B16D**	2	35	39	36	40	150
65	161	21,81	4170	2,1							
74	143	19,27	4040	2,3							
79	132	17,89	3970	2,4							
88	120	16,22	3870	2,5							
98	108	14,56	3760	2,7							
113	93	12,54	3620	3							
120	87	11,79	3550	3,1							
140	75	10,15	3410	3,4							
157	67	9,07	3300	3,6							
44	240	32,4	3040	0,85	**iC 373 – HB3 90 S 4 B12D**	3	29	33	31	35	148
49	213	28,73	3410	0,95							
58	181	24,42	3800	1,15							

(1) Finite transmission ratio *i*

P_1 = 1,1 kW

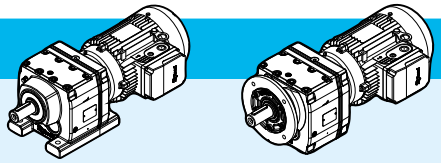

n_2 min^{-1}	M_2 N m	i	F_{r2} N	fs			kg foot HB	kg foot HBZ	kg flange HB	kg flange HBZ	p.
74	143	19,31	3810	1,45	**iC 372 – HB3 90 S 4 B12D**	2	28	32	30	34	148
79	134	18,05	3750	1,55							
91	115	15,6	3630	1,8							
107	98	13,25	3490	2							
120	88	11,83	3390	2,2							
140	75	10,11	3260	2,4							
150	70	9,47	3200	2,5							
178	59	7,97	3060	2,7							
213	49	6,67	2890	3							
251	42	5,67	2760	3,5							
281	37	5,06	2670	3,7							
73	143	19,35	2420	0,95	**iC 272 – HB3 90 S 4 B12D**	2	27	31	28	32	146
79	134	18,08	2400	1							
91	116	15,63	2340	1,15							
107	98	13,28 (1)	2270	1,35							
120	88	11,86	2220	1,55							
140	75	10,13	2140	1,8							
174	60	8,16	1990	2							
186	56	7,63 (1)	1960	2,1							
215	49	6,59	1900	2,3							
254	41	5,6 (1)	1820	2,5							
284	37	5 (1)	1770	2,6							
332	32	4,27	1700	2,8							
355	30	4 (1)	1670	2,9							
421	25	3,37	1600	3,2							
216	49	13,28 (1)	1950	2,7	**iC 272 – HB3 80 B 2 B12C**	2	21	24	21	25	146
242	43	11,86	1890	3							
284	37	10,13	1820	3,3							
305	34	9,41	1750	3,5							
352	30	8,16	1690	3,9							
377	28	7,63 (1)	1660	4							
436	24	6,59	1590	4,4							
513	20	5,6 (1)	1520	4,8							
575	18	5 (1)	1480	5,2							
673	16	4,27	1410	5,6							
719	15	4 (1)	1380	5,8							
853	12	3,37	1320	6,4							

(1) Finite transmission ratio *i*

P_1 = 1,5 kW

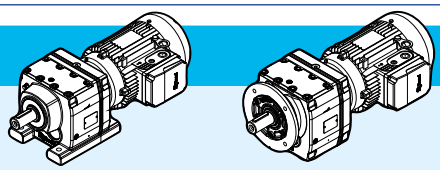

n_2 min^{-1}	M_2 N m	i	F_{r2} N	fs			kg foot HB	kg foot HBZ	kg flange HB	kg flange HBZ	p.
5,6	2562	255,71	24000	1,3	**iC 973 – HB3 90 L 4 B30D**	3	145	151	161	167	160
5,9	2417	241,25	24800	1,4							
6,6	2167	216,28	25900	1,55							
7,7	1866	186,3	27000	1,8							
8,4	1703	170,02	27400	1,95							
9,5	1510	150,78	27700	2,2							
11	1270	126,75	28000	2,6							
12	1167	116,48	28100	2,8							
14	1036	103,44	28200	3,1							
15	926	92,48	28300	3,5							
7,9	1821	181,77	15100	0,95	**iC 873 – HB3 90 L 4 B25D**	3	92	98	100	106	158
9,2	1556	155,34	17100	1,1							
10	1427	142,41	17900	1,25							
11	1252	124,97	18800	1,4							
12	1186	118,43 (1)	19200	1,5							
14	1038	103,65	19800	1,7							
15	935	93,38	20000	1,85							
17	821	81,92	20000	2,1							
20	727	72,57	20000	2,4							
22	638	63,68 (1)	20000	2,7							
24	605	60,35 (1)	20000	2,9							
27	529	52,82	20000	3,2							
30	477	47,58	20000	3,6							
34	418	41,74	20000	4,1							
39	369	36,84 (1)	19400	4,6							
15	931	92,97	8980	1	**iC 773 – HB3 90 L 4 B20D**	3	58	64	64	70	156
17	819	81,8	10100	1,1							
19	774	77,24	10500	1,15							
22	659	65,77	11300	1,35							
25	578	57,68	11700	1,55							
27	522	52,07	12000	1,7							
31	459	45,81	12300	1,95							
33	433	43,26	12400	2							
39	369	36,83	12600	2,4							
43	335	33,47	12700	2,5							
49	290	29	12400	2,9							
57	253	25,23	11900	3,1							
61	234	23,37	11600	3,6	**iC 772 – HB3 90 L 4 B20D**	2	56	62	63	69	156
67	215	21,43	11400	3,9							
76	188	18,8	10900	4,2							
23	614	61,26	7550	1,1	**iC 673 – HB3 90 L 4 B16D**	3	51	57	53	59	154
25	570	56,89	8030	1,2							
28	517	51,56	8530	1,3							
31	464	46,29	8960	1,4							

(1) Finite transmission ratio *i*

P_1 = 1,5 kW

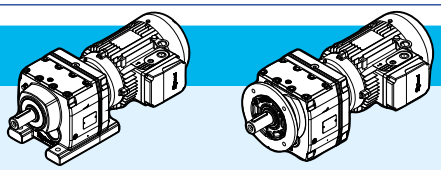

n_2 min^{-1}	M_2 N m	i	F_{r2} N	fs			kg foot HB	kg foot HBZ	kg flange HB	kg flange HBZ	p.
36	399	39,88 (1)	9390	1,55	**iC 673 – HB3 90 L 4 B16D**	3	51	57	53	59	154
38	376	37,5	9530	1,6							
44	323	32,27	9810	1,75							
50	289	28,83	9960	1,9							
51	282	28,13	9890	2,1	**iC 672 – HB3 90 L 4 B16D**	2	50	56	53	59	154
54	268	26,72	9760	2,1							
61	235	23,44	9410	2,7							
72	199	19,89	8980	3,3							
80	180	17,95	8720	3,5							
27	533	53,22	5900	0,9	**iC 573 – HB3 90 L 4 B16D**	3	42	48	45	51	152
30	483	48,23	5980	1							
33	434	43,3	5880	1,1							
38	374	37,3 (1)	5730	1,25							
41	351	35,07	5670	1,35							
47	302	30,18	5500	1,55							
53	270	26,97	5380	1,75							
54	264	26,31	5350	1,8	**iC 572 – HB3 90 L 4 B16D**	2	41	47	44	50	152
57	250	24,99 (1)	5290	1,85							
65	220	21,93	5130	2,1							
77	186	18,6 (1)	4930	2,5							
85	168	16,79	4810	2,7							
97	148	14,77 (1)	4650	3,1							
103	140	13,95 (1)	4580	3,3							
120	119	11,88	4390	3,8							
39	370	36,93	3260	0,9	**iC 473 – HB3 90 L 4 B16D**	3	36	42	37	43	150
41	348	34,73	4290	0,95							
48	299	29,88	4190	1,1							
54	267	26,7	4110	1,25							
61	236	23,59	4020	1,4							
61	233	23,28	4010	1,45	**iC 472 – HB3 90 L 4 B16D**	2	36	42	37	43	150
66	218	21,81	3960	1,55							
74	193	19,27	3860	1,7							
80	179	17,89	3800	1,75							
88	162	16,22	3710	1,85							
98	146	14,56	3620	2							
114	126	12,54	3490	2,2							
121	118	11,79	3440	2,3							
141	102	10,15	3310	2,5							
158	91	9,07	3210	2,6							
178	80	8,01	3110	2,8			35	41	36	42	
184	78	7,76 (1)	3040	2,4							
205	70	6,96	2950	2,6							
238	60	6	2830	2,9							
254	56	5,64 (1)	2780	3,1							

(1) Finite transmission ratio *i*

P_1 = 1,5 kW

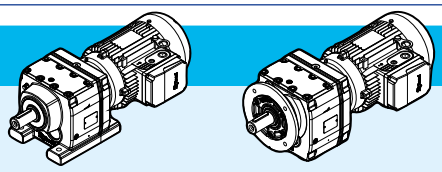

n_2 min^{-1}	M_2 N m	i	F_{r2} N	fs			kg foot HB	kg foot HBZ	kg flange HB	kg flange HBZ	p.
295	49	4,85	2670	3,5	**iC 472 – HB3 90 L 4 B16D**	2	35	41	36	42	150
330	43	4,34	2590	3,8							
373	38	3,83	2500	4,2							
74	193	19,31	2760	1,05	**iC 372 – HB3 90 L 4 B12D**	2	29	35	31	37	148
79	181	18,05	2930	1,15							
92	156	15,6	3230	1,3							
108	133	13,25	3320	1,5							
121	119	11,83	3240	1,6							
141	101	10,11	3130	1,75							
151	95	9,47	3080	1,8							
179	80	7,97	2950	2							
214	67	6,67	2800	2,2							
252	57	5,67	2680	2,6							
283	51	5,06	2600	2,7							
331	43	4,32	2490	3							
353	41	4,05	2450	3,1							
419	34	3,41	2330	3,4							
218	66	13,25	2830	2,9	**iC 372 – HB3 90 S 2 B12D**	2	26	30	28	32	148
244	59	11,83	2740	3,1							
286	50	10,11	2630	3,4							
305	47	9,47	2580	3,6							
362	40	7,97	2460	3,9							
91	157	15,63	1780	0,85	**iC 272 – HB3 90 L 4 B12D**	2	28	34	28	34	146
108	133	13,28 (1)	2080	1							
121	119	11,86	2060	1,15							
141	101	10,13	2010	1,3							
175	82	8,16	1870	1,5							
188	76	7,63 (1)	1850	1,55							
217	66	6,59	1800	1,65							
255	56	5,6 (1)	1740	1,8							
286	50	5 (1)	1700	1,95							
335	43	4,27	1640	2,1							
358	40	4 (1)	1610	2,2							
424	34	3,37	1540	2,4							
244	59	11,86	1810	2,2	**iC 272 – HB3 90 S 2 B12D**	2	25	29	25	29	146
285	50	10,13	1750	2,4							
354	40	8,16	1620	2,9							
379	38	7,63 (1)	1600	3							
438	33	6,59	1540	3,2							
516	28	5,6 (1)	1480	3,6							
578	25	5 (1)	1430	3,8							
677	21	4,27	1370	4,1							
723	20	4 (1)	1350	4,3							
858	17	3,37	1290	4,7							

(1) Finite transmission ratio *i*

P_1 = 2,2 kW

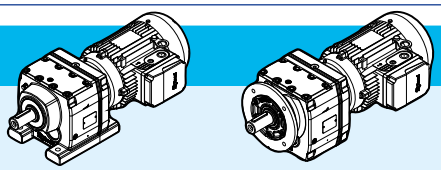

n_2 min^{-1}	M_2 N m	i	F_{r2} N	fs			kg foot HB	kg foot HBZ	kg flange HB	kg flange HBZ	p.
6,7	3156	216,28	13800	1,05	**iC 973 – HB3 100 LA 4 B30E**	3	153	159	169	175	160
7,7	2718	186,3	22900	1,25							
8,5	2481	170,02	24300	1,35							
9,6	2200	150,78	25600	1,5							
11	1849	126,75	27000	1,8							
12	1699	116,48	27400	1,95							
14	1509	103,44	27600	2,2							
16	1349	92,48	27900	2,4							
17	1213	83,15	28000	2,7							
20	1053	72,17	28200	3,1							
22	951	65,21	27500	3,4							
24	874	59,92	26800	3,7							
27	776	53,21	25900	4,1							
30	694	47,58	25000	4,6							
12	1823	124,97	13900	0,95	**iC 873 – HB3 100 LA 4 B25E**	3	102	108	110	116	158
12	1728	118,43 (1)	15700	1							
14	1512	103,65	17300	1,15							
15	1362	93,38	18200	1,3							
18	1195	81,92	19000	1,45							
20	1059	72,57	19600	1,65							
23	929	63,68 (1)	20000	1,85							
24	881	60,35 (1)	20000	1,95							
27	771	52,82	20000	2,2							
30	694	47,58	20000	2,5							
34	609	41,74	19700	2,8							
39	537	36,84 (1)	19000	3,2							
44	476	32,66 (1)	18400	3,5							
42	502	34,4 (1)	18700	3,4	**iC 872 – HB3 100 LA 4 B25E**	2	100	106	108	114	158
46	458	31,4	18200	3,7							
52	406	27,84 (1)	17500	4,1							
62	341	23,4	16700	4,6							
67	314	21,51	16200	4,9							
22	960	65,77	7900	0,95	**iC 773 – HB3 100 LA 4 B20E**	3	67	73	74	80	156
25	842	57,68	9770	1,05							
28	760	52,07	10500	1,15							
31	668	45,81	11200	1,35							
33	631	43,26	11400	1,4							
39	537	36,83	11900	1,65							
43	488	33,47	12100	1,75							
50	423	29	12000	1,95							
57	368	25,23	11600	2,1							
62	341	23,37	11400	2,4	**iC 772 – HB3 100 LA 4 B20E**	2	66	72	73	79	156
67	313	21,43	11100	2,6							
77	274	18,8	10700	2,9							

(1) Finite transmission ratio *i*

P_1 = 2,2 kW

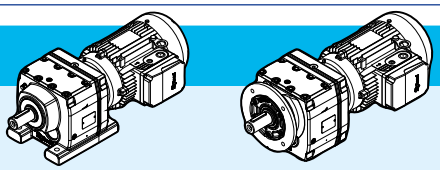

n_2 min^{-1}	M_2 N m	i	F_{r2} N	fs			kg foot HB	kg foot HBZ	kg flange HB	kg flange HBZ	p.
81	260	17,82 (1)	10500	3	**iC 772 – HB3 100 LA 4 B20E**	2	66	72	73	79	156
92	228	15,6	10100	3,3							
102	205	14,05	9830	3,5							
36	582	39,88 (1)	7820	1,05	**iC 673 – HB3 100 LA 4 B16E**	3	60	66	63	69	154
38	547	37,5	8180	1,1							
45	471	32,27	8850	1,2							
50	421	28,83	9220	1,3							
61	342	23,44	9070	1,85	**iC 672 – HB3 100 LA 4 B16E**	2	59	65	62	68	154
72	290	19,89	8700	2,3							
80	262	17,95	8470	2,4							
91	230	15,79	8180	2,6							
97	218	14,91	8050	2,7							
113	185	12,7	7700	2,9							
125	168	11,54	7500	3,1							
144	146	10	7190	3,3							
166	127	8,7 (1)	6910	3,5							
185	114	7,79	6700	3,4			57	63	60	66	
39	544	37,3 (1)	5120	0,85	**iC 573 – HB3 100 LA 4 B16E**	3	52	58	55	61	152
41	512	35,07	5100	0,9							
48	440	30,18	5010	1,05							
53	393	26,97	4940	1,2							
66	320	21,93	4780	1,45	**iC 572 – HB3 100 LA 4 B16E**	2	51	57	54	60	152
77	271	18,6 (1)	4630	1,7							
86	245	16,79	4540	1,9							
97	216	14,77 (1)	4420	2,1							
103	204	13,95 (1)	4360	2,3							
121	173	11,88	4210	2,6							
133	157	10,79	4110	2,8							
154	136	9,35	3970	3							
159	132	9,06	3950	2,9			49	55	52	58	
181	116	7,97	3820	3,1							
132	159	21,93	4120	2,9	**iC 572 – HB3 90 LA 2 B16D**	2	40	46	43	49	152
155	135	18,6 (1)	3960	3,4							
172	122	16,79	3860	3,7							
196	107	14,77 (1)	3730	4,1							
207	101	13,95 (1)	3680	4,3							
75	281	19,27	3540	1,15	**iC 472 – HB3 100 LA 4 B16E**	2	45	51	46	52	150
89	237	16,22	3450	1,3							
99	212	14,56	3380	1,35							
115	183	12,54	3290	1,5							
122	172	11,79	3250	1,55							
142	148	10,15	3140	1,7							
159	132	9,07	3070	1,8							
180	117	8,01	2980	1,95							

(1) Finite transmission ratio *i*

P_1 = 2,2 kW

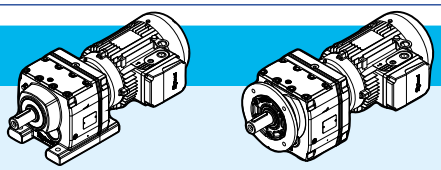

n_2 min^{-1}	M_2 N m	i	F_{r2} N	fs			kg foot HB	kg foot HBZ	kg flange HB	kg flange HBZ	p.
186	113	7,76 (1)	2890	1,65	**iC 472 – HB3 100 LA 4 B16E**	2	45	51	46	52	150
207	102	6,96	2820	1,75							
240	88	6	2720	2							
255	82	5,64 (1)	2680	2,1							
297	71	4,85	2580	2,4							
332	63	4,34	2510	2,6							
376	56	3,83	2430	2,9							
150	140	19,27	3110	2,1	**iC 472 – HB3 90 LA 2 B16D**	2	35	41	36	42	150
178	118	16,22	2980	2,3							
198	106	14,56	2910	2,5							
230	91	12,54	2800	2,8							
245	86	11,79	2760	2,9							
285	74	10,15	2650	3,1							
319	66	9,07	2570	3,4							
361	58	8,01	2490	3,5			34	40	35	41	
92	228	15,6	1180	0,9	**iC 372 – HB3 100 LA 4 B12E**	2	37	43	39	45	148
109	193	13,25	1740	1							
122	173	11,83	2060	1,1							
142	147	10,11	2410	1,2							
152	138	9,47	2530	1,25							
181	116	7,97	2790	1,35							
216	97	6,67	2500	1,5							
254	83	5,67	2550	1,75							
285	74	5,06	2490	1,85							
333	63	4,32	2400	2							
356	59	4,05	2360	2,1							
422	50	3,41	2260	2,3							
185	113	15,6	2770	1,75	**iC 372 – HB3 90 LA 2 B12D**	2	28	34	30	36	148
218	96	13,25	2680	2							
244	86	11,83	2610	2,1							
286	73	10,11	2520	2,3							
305	69	9,47	2480	2,4							
362	58	7,97	2370	2,7							
433	48	6,67	2240	3							
510	41	5,67	2150	3,5							
571	37	5,06	2080	3,7							
669	31	4,32	1990	4							
714	29	4,05	1960	4,2							
848	25	3,41	1860	4,5							
142	148	10,13	1180	0,9	**iC 272 – HB3 100 LA 4 B12E**	2	36	42	37	43	146
218	96	6,59	1180	1,15							
257	82	5,6 (1)	1430	1,25							
288	73	5 (1)	1570	1,3							

(1) Finite transmission ratio *i*

P_1 = 2,2 kW

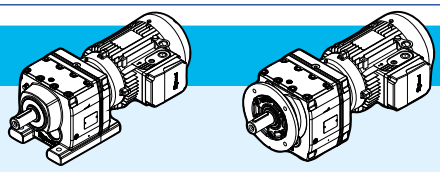

n_2 min^{-1}	M_2 N m	i	F_{r2} N	fs			kg foot HB	kg foot HBZ	kg flange HB	kg flange HBZ	p.
337	62	4,27	1530	1,4	**iC 272 – HB3 100 LA 4 B12E**	2	36	42	37	43	146
360	58	4 (1)	1510	1,45							
427	49	3,37	1460	1,6							
218	97	13,28 (1)	1700	1,35	**iC 272 – HB3 90 LA 2 B12D**	2	27	33	27	33	146
244	86	11,86	1680	1,5							
285	74	10,13	1630	1,65							
438	48	6,59	1450	2,2							
516	41	5,6 (1)	1400	2,4							
578	36	5 (1)	1360	2,6							
677	31	4,27	1320	2,8							
723	29	4 (1)	1290	2,9							
858	24	3.37	1240	3.2							

P_1 = 3 kW

9,6	2979	150,78	21000	1,1	**iC 973 – HB3 112 MA 4 B30E**	3	160	166	176	182	160
11	2504	126,75	24100	1,3							
12	2301	116,48	25100	1,4							
14	2044	103,44	26200	1,6							
16	1827	92,48	27100	1,8							
17	1643	83,15	27400	1,95							
20	1426	72,17	27500	2,3							
22	1288	65,21	26700	2,5							
24	1184	59,92	26100	2,7							
27	1051	53,21	25300	3							
30	940	47,58	24500	3,4							
34	845	42,78	23800	3,8							
39	734	37,13	22800	4,2							
44	657	33,25	22100	4,5							
16	1845	93,38	12100	0,95	**iC 873 – HB3 112 MA 4 B25E**	3	110	116	118	124	158
18	1619	81,92	16500	1,05							
20	1434	72,57	17700	1,2							
23	1258	63,68 (1)	18700	1,35							
24	1192	60,35 (1)	19000	1,45							
27	1044	52,82	19700	1,65							
30	940	47,58	19800	1,8							
35	825	41,74	19200	2,1							
39	728	36,84 (1)	18500	2,3							
44	645	32,66 (1)	17900	2,6							
52	551	27,88	17200	3							
42	680	34,4 (1)	18200	2,5	**iC 872 – HB3 112 MA 4 B25E**	2	108	114	116	122	158
46	620	31,4	17700	2,7							
52	550	27,84 (1)	17200	3							
62	462	23,4	16300	3,4							

(1) Finite transmission ratio *i*

P_1 = 3 kW

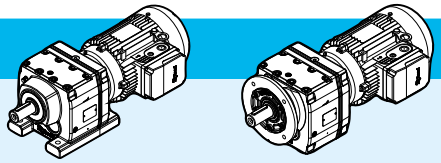

n_2 min^{-1}	M_2 N m	i	F_{r2} N	fs			kg foot HB	kg foot HBZ	kg flange HB	kg flange HBZ	p.
67	425	21,51	15900	3,6	**iC 872 – HB3 112 MA 4 B25E**	2	108	114	116	122	158
76	377	19,1	15400	3,9							
85	337	17,08 (1)	14900	4,2							
94	303	15,35	14400	4,5							
32	905	45,81	9090	1	**iC 773 – HB3 112 MA 4 B20E**	3	76	82	83	89	156
34	855	43,26	9620	1,05							
39	728	36,83	10700	1,2							
43	661	33,47	11200	1,3							
50	573	29	11600	1,45							
57	499	25,23	11200	1,55							
62	462	23,37	11000	1,8	**iC 772 – HB3 112 MA 4 B20E**	2	75	81	82	88	156
68	423	21,43	10700	1,95							
77	372	18,8	10400	2,1							
81	352	17,82 (1)	10200	2,2							
93	308	15,6	9870	2,4							
103	278	14,05	9600	2,6							
118	244	12,33	9250	2,9							
133	215	10,88	8930	3,1							
150	191	9,64	8620	3,3			72	78	78	84	
169	170	8,59	8400	3,7							
187	153	7,74	8140	4							
214	134	6,79	7830	4,3							
62	463	23,44	8660	1,35	**iC 672 – HB3 112 MA 4 B16E**	2	67	73	69	75	154
73	393	19,89	8350	1,65							
81	355	17,95	8150	1,8							
92	312	15,79	7900	1,95							
97	295	14,91	7790	2							
114	251	12,7	7470	2,2							
126	228	11,54	7290	2,3							
145	198	10	7010	2,4							
54	533	26,97	4430	0,9	**iC 573 – HB3 112 MA 4 B16E**	3	59	65	62	68	152
66	433	21,93	4360	1,1	**iC 572 – HB3 112 MA 4 B16E**	2	58	64	61	67	152
78	368	18,6 (1)	4280	1,25							
86	332	16,79	4220	1,4							
98	292	14,77 (1)	4140	1,6							
104	276	13,95 (1)	4100	1,65							
122	235	11,88	3980	1,9							
134	213	10,79	3900	2							
155	185	9,35	3790	2,2							
160	179	9,06	3780	2,2			56	62	60	66	
182	158	7,97	3670	2,3							
193	149	7,53	3620	2,4							
226	127	6,41	3480	2,7							

(1) Finite transmission ratio *i*

P_1 = 3 kW

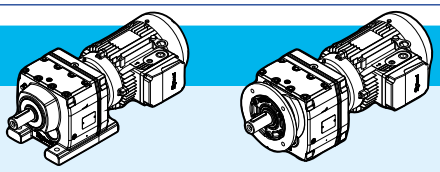

n_2 min^{-1}	M_2 N m	i	F_{r2} N	fs		kg foot HB	kg foot HBZ	kg flange HB	kg flange HBZ	p.
249	115	5,82	3400	2,8	**iC 572 – HB3 112 MA 4 B16E** 2	56	62	60	66	152
287	100	5,05	3270	3,1						
330	87	4,39	3160	3,2						
134	214	21,93	3920	2,1	**iC 572 – HB3 100 LA 2 B16E** 2	49	55	52	58	152
158	182	18,6 (1)	3790	2,5						
174	164	16,79	3700	2,7						
198	144	14,77 (1)	3600	3						
210	136	13,95 (1)	3550	3,2						
247	116	11,88	3410	3,5						
271	106	10,79	3330	3,7						
89	320	16,22	2210	0,95	**iC 472 – HB3 112 MA 4 B16E** 2	53	59	54	60	150
100	288	14,56	2650	1						
116	248	12,54	3040	1,1						
123	233	11,79	3020	1,15						
143	201	10,15	2950	1,25						
160	179	9,07	2890	1,35						
181	158	8,01	2820	1,45		52	58	53	59	
187	153	7,76 (1)	2720	1,2						
208	138	6,96	2660	1,3						
242	119	6	2590	1,5						
257	111	5,64 (1)	2550	1,55						
299	96	4,85	2470	1,75						
334	86	4,34	2410	1,95						
378	76	3,83	2340	2,1						
248	115	11,79	2650	2,1	**iC 472 – HB3 100 LA 2 B16E** 2	43	49	44	50	150
289	99	10,15	2560	2,3						
323	89	9,07	2490	2,5						
366	78	8,01	2410	2,6						
378	76	7,76 (1)	2350	2,3						
421	68	6,96	2290	2,5						
489	59	6	2200	2,7						
520	55	5,64 (1)	2170	2,8						
604	47	4,85	2080	3,2						
676	42	4,34	2020	3,4						
765	37	3,83	1950	3,8						
143	200	10,11	920	0,9	**iC 372 – HB3 112 MA 4 B12E** 2	46	52	48	54	148
153	187	9,47	1140	0,9						
182	158	7,97	1610	1						
217	132	6,67	1350	1,1		45	51	47	53	
256	112	5,67	1700	1,25						
287	100	5,06	1900	1,35						
336	85	4,32	2110	1,5						
358	80	4,05	2180	1,55						
425	67	3,41	2160	1,65						

(1) Finite transmission ratio *i*

P_1 = 3 kW

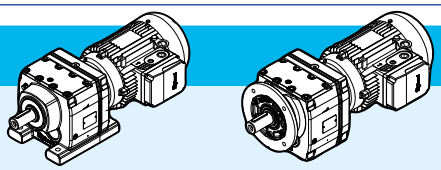

n_2 min^{-1}	M_2 N m	i	F_{r2} N	fs			kg foot HB	kg foot HBZ	kg flange HB	kg flange HBZ	p.
290	99	10,11	2380	1,7	**iC 372 – HB3 100 LA 2 B12E**	2	35	41	37	43	148
310	93	9,47	2360	1,8							
367	78	7,97	2270	2							
439	65	6,67	2150	2,2							
517	55	5,67	2070	2,6							
579	49	5,06	2020	2,7							
678	42	4,32	1940	3							
724	40	4,05	1900	3,1							
859	33	3,41	1820	3,4							
259	111	5,6 (1)	455	0,9	**iC 272 – HB3 112 MA 4 B12E**	2	45	51	45	51	146
290	99	5 (1)	695	0,95							
340	84	4,27	970	1,05							
363	79	4 (1)	1070	1,1							
430	67	3,37	1280	1,2							
445	64	6,59	1290	1,65	**iC 272 – HB3 100 LA 2 B12E**	2	34	40	35	41	146
523	55	5,6 (1)	1320	1,8							
586	49	5 (1)	1290	1,95							
686	42	4,27	1250	2,1							
733	39	4 (1)	1240	2,2							
870	33	3,37	1190	2,4							

P_1 = 4 kW

12	3069	116,48	18300	1,05	**iC 973 – HB3 112 M 4 B30F**	3	162	171	178	187	160
14	2725	103,44	22900	1,2							
16	2436	92,48	24500	1,35							
17	2191	83,15	25700	1,5							
20	1901	72,17	26500	1,7							
22	1718	65,21	25800	1,85							
24	1579	59,92	25300	2							
27	1402	53,21	24600	2,3							
30	1253	47,58	23800	2,5							
34	1127	42,78	23200	2,8							
39	978	37,13	22300	3,2							
44	876	33,25	21600	3,4							
45	844	32,05	21400	3,4	**iC 972 – HB3 112 M 4 B30F**	2	158	167	174	183	160
53	716	27,19	20400	4							
58	659	25,03	20000	4,4							
65	589	22,37	19300	4,8							
72	531	20,14	18700	5,1							
23	1678	63,68 (1)	13700	1,05	**iC 873 – HB3 112 M 4 B25F**	3	112	121	120	129	158
24	1590	60,35 (1)	14300	1,1							
27	1391	52,82	15500	1,25							
30	1254	47,58	16300	1,35							

(1) Finite transmission ratio *i*

P_1 = 4 kW

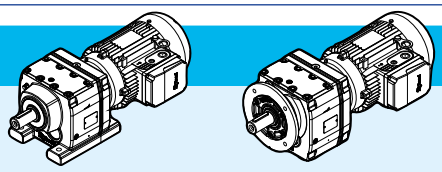

n_2 min^{-1}	M_2 N m	i	F_{r2} N	fs			kg foot HB	kg foot HBZ	kg flange HB	kg flange HBZ	p.
35	1100	41,74	17000	1,55	**iC 873 – HB3 112 M 4 B25F**	3	112	121	120	129	158
39	970	36,84 (1)	17500	1,75							
44	860	32,66 (1)	17400	1,95							
52	735	27,88	16700	2,2							
42	906	34,4 (1)	17600	1,85	**iC 872 – HB3 112 M 4 B25F**	2	110	119	118	127	158
46	827	31,4	17200	2							
52	734	27,84 (1)	16700	2,3							
62	617	23,4	15900	2,6							
67	567	21,51	15600	2,7							
76	503	19,1	15100	2,9							
85	450	17,08 (1)	14600	3,2							
94	405	15,35	14200	3,4							
109	351	13,33	13600	3,7							
122	314	11,93	13200	4							
39	970	36,83	7260	0,9	**iC 773 – HB3 112 M 4 B20F**	3	78	87	85	94	156
43	882	33,47	9400	0,95							
50	764	29	10500	1,1							
57	665	25,23	10700	1,2							
62	616	23,37	10500	1,35	**iC 772 – HB3 112 M 4 B20F**	2	77	86	84	93	156
68	565	21,43	10300	1,45							
77	495	18,8	10000	1,6							
81	469	17,82 (1)	9880	1,7							
93	411	15,6	9560	1,8							
103	370	14,05	9310	1,95							
118	325	12,33	9000	2,1							
133	287	10,88	8700	2,3							
150	254	9,64	8420	2,5			74	83	80	89	
169	226	8,59	8240	2,8							
187	204	7,74	8000	3							
214	179	6,79	7700	3,3							
242	158	5,99 (1)	7420	3,5							
273	140	5,31 (1)	7160	3,7							
73	524	19,89	7910	1,25	**iC 672 – HB3 112 M 4 B16F**	2	69	78	71	80	154
81	473	17,95	7750	1,35							
92	416	15,79	7550	1,45							
97	393	14,91	7460	1,5							
114	335	12,7	7190	1,6							
126	304	11,54	7030	1,7							
145	263	10	6790	1,8							
167	229	8,7 (1)	6550	1,95							
186	205	7,79	6390	1,85			67	76	70	79	
197	194	7,36 (1)	6290	1,95							
231	165	6,27	6020	2							
255	150	5,7	5860	2,1							

(1) Finite transmission ratio *i*

P_1 = 4 kW

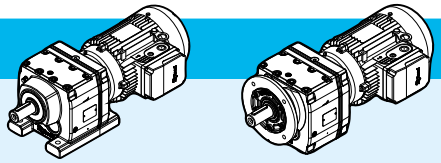

n_2 min^{-1}	M_2 N m	i	F_{r2} N	fs			kg foot HB	kg foot HBZ	kg flange HB	kg flange HBZ	p.
294	130	4,93	5630	2,2	**iC 672 – HB3 112 M 4 B16F**	2	67	76	70	79	154
338	113	4,29	5410	2,4							
78	490	18,6 (1)	3680	0,95	**iC 572 – HB3 112 M 4 B16F**	2	60	69	63	72	152
86	442	16,79	3820	1,05							
98	389	14,77 (1)	3790	1,2							
104	368	13,95 (1)	3770	1,25							
122	313	11,88	3700	1,45							
134	284	10,79	3650	1,55							
155	246	9,35	3560	1,65							
160	239	9,06	3570	1,6			58	67	62	71	
182	210	7,97	3480	1,75							
193	198	7,53	3440	1,8							
226	169	6,41	3330	2							
249	153	5,82	3260	2,1							
287	133	5,05	3160	2,3							
330	116	4,39	3050	2,4							
143	267	10,15	2070	0,95	**iC 472 – HB3 112 M 4 B16F**	2	55	64	56	65	150
160	239	9,07	2450	1							
181	211	8,01	2630	1,1			54	63	55	64	
208	183	6,96	2470	1							
242	158	6	2420	1,1							
257	149	5,64 (1)	2400	1,2							
299	128	4,85	2340	1,35							
334	114	4,34	2290	1,45							
378	101	3,83	2230	1,6							
181	211	16,22	2630	1,3	**iC 472 – HB3 112 M 2 B16F**	2	53	59	54	60	150
202	189	14,56	2590	1,4							
234	163	12,54	2520	1,55							
249	153	11,79	2500	1,6							
290	132	10,15	2430	1,75							
324	118	9,07	2370	1,85							
367	104	8,01	2310	1,95			52	58	53	59	
379	101	7,76 (1)	2230	1,75							
422	90	6,96	2180	1,85							
490	78	6	2110	2							
521	73	5,64 (1)	2080	2,1							
606	63	4,85	2010	2,4							
678	56	4,34	1950	2,6							
767	50	3,83	1890	2,9							

(1) Finite transmission ratio *i*

P_1 = 5,5 kW

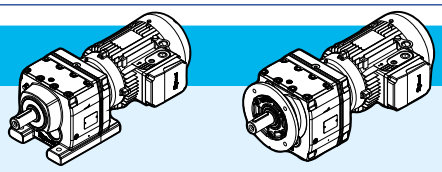

n_2 min^{-1}	M_2 N m	i	F_{r2} N	fs			kg foot HB	kg foot HBZ	kg flange HB	kg flange HBZ	p.
18	2971	83,15	20000	1,1	**iC 973 – HB3 132 S 4 B30G**	3	186	197	202	213	160
20	2579	72,17	22100	1,25							
23	2330	65,21	24600	1,4							
25	2141	59,92	24100	1,5							
28	1901	53,21	23500	1,7							
31	1700	47,58	22900	1,85							
34	1528	42,78	22400	2,1							
40	1327	37,13	21600	2,3							
44	1188	33,25	21000	2,5							
53	986	27,58	20000	2,8							
46	1145	32,05	20800	2,5	**iC 972 – HB3 132 S 4 B30G**	2	182	193	198	209	160
54	971	27,19	19900	3							
59	894	25,03	19500	3,3							
66	799	22,37	18900	3,5							
73	720	20,14	18300	3,8							
81	652	18,24	17800	4,1							
91	578	16,17	17200	4,4							
31	1700	47,58	15700	1	**iC 873 – HB3 132 S 4 B25G**	3	137	148	144	155	158
35	1492	41,74	17300	1,15							
40	1316	36,84 (1)	17100	1,3							
45	1167	32,66 (1)	16600	1,45							
53	996	27,88	16100	1,65							
53	995	27,84 (1)	16000	1,7	**iC 872 – HB3 132 S 4 B25G**	2	135	146	143	154	158
63	836	23,4	15400	1,9							
68	769	21,51	15100	2							
77	682	19,1	14600	2,2							
86	610	17,08 (1)	14200	2,3							
96	549	15,35	13800	2,5							
110	476	13,33	13300	2,7							
123	426	11,93	12900	2,9							
148	354	9,9 (1)	12200	3,3							
161	327	9,14 (1)	12100	3,7			127	138	135	146	
179	294	8,22	11700	3,9							
206	255	7,13	11200	4,2							
78	672	18,8	9320	1,15	**iC 772 – HB3 132 S 4 B20G**	2	100	111	106	117	156
82	637	17,82 (1)	9360	1,25							
94	557	15,6	9110	1,35							
105	502	14,05	8910	1,45							
119	440	12,33	8650	1,55							
135	389	10,88	8390	1,7							
152	345	9,64	8150	1,85			96	107	103	114	
171	307	8,59	8030	2,1							
190	277	7,74	7810	2,2							
216	243	6,79	7530	2,4							

(1) Finite transmission ratio *i*

P_1 = 5,5 kW

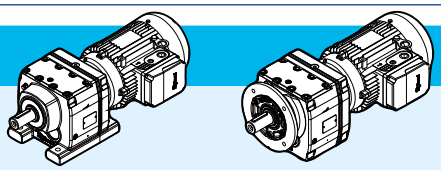

n_2 min^{-1}	M_2 N m	i	F_{r2} N	fs			kg foot HB	kg foot HBZ	kg flange HB	kg flange HBZ	p.
245	214	5,99 (1)	7270	2,5	**iC 772 – HB3 132 S 4 B20G**	2	96	107	103	114	156
277	190	5,31 (1)	7030	2,7							
93	564	15,79	6720	1,05	**iC 672 – HB3 132 S 4 B16G**	2	92	103	95	106	154
99	533	14,91	6980	1,1							
116	454	12,7	6790	1,2							
127	412	11,54	6660	1,25							
147	357	10	6470	1,35							
169	311	8,7 (1)	6280	1,4							
189	279	7,79	6150	1,35			90	101	93	104	
200	263	7,36 (1)	6070	1,4							
235	224	6,27	5830	1,45							
258	203	5,7	5690	1,5							
298	176	4,93	5480	1,65							
342	153	4,29	5280	1,75							
340	154	8,7 (1)	5280	2,9	**iC 672 – HB3 132 S 2 B16G**	2	87	98	90	101	154
380	138	7,79	5140	2,7			85	96	88	99	
402	131	7,36 (1)	5060	2,8							
472	111	6,27	4830	3							
520	101	5,7	4700	3,1							
600	88	4,93	4510	3,3							
689	76	4,29	4330	3,5							
100	528	14,77 (1)	1860	0,85	**iC 572 – HB3 132 S 4 B16G**	2	84	95	87	98	152
105	498	13,95 (1)	2200	0,9							
124	424	11,88	3000	1,05							
136	386	10,79	3270	1,15							
157	334	9,35	3240	1,25							
184	285	7,97	3210	1,3			82	93	85	96	
195	269	7,53	3190	1,3							
229	229	6,41	3110	1,45							
252	208	5,82	3060	1,55							
291	180	5,05	2980	1,7							
335	157	4,39	2900	1,8							
317	166	9,35	2920	2,2	**iC 572 – HB3 132 S 2 B16G**	2	79	90	82	93	152
371	141	7,97	2840	2,5			77	88	80	91	
393	134	7,53	2800	2,6							
462	114	6,41	2700	2,9							
508	103	5,82	2640	3,1							
587	90	5,05	2550	3,4							
674	78	4,39	2460	3,6							
303	173	4,85	1920	1	**iC 472 – HB3 132 S 4 B16G**	2	78	89	79	90	150
339	155	4,34	2110	1,05							
384	137	3,83	2070	1,15							

(1) Finite transmission ratio *i*

P_1 = 5,5 kW

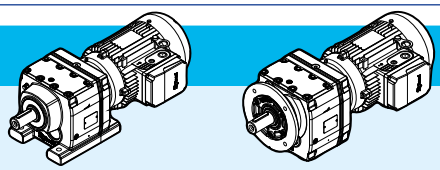

n_2 min^{-1}	M_2 N m	i	F_{r2} N	fs			kg foot HB	kg foot HBZ	kg flange HB	kg flange HBZ	p.
236	223	12,54	1780	1,1	**iC 472 – HB3 132 S 2 B16G**	2	73	84	74	85	150
251	209	11,79	1970	1,15							
292	180	10,15	2250	1,3							
326	161	9,07	2210	1,35							
369	142	8,01	2170	1,45							
494	106	6	1990	1,5							
525	100	5,64 (1)	1970	1,55							
610	86	4,85	1910	1,75							
683	77	4,34	1860	1,9							
773	68	3,83	1810	2,1							

P_1 = 7,5 kW

24	2940	59,92	21500	1,1	**iC 973 – HB3 132 M 4 B30G**	3	194	205	210	221	160
27	2611	53,21	22100	1,2							
31	2334	47,58	21600	1,35							
34	2099	42,78	21200	1,5							
39	1821	37,13	20600	1,7							
44	1631	33,25	20100	1,8							
53	1353	27,58	19200	2,1							
46	1572	32,05	19900	1,85	**iC 972 – HB3 132 M 4 B30G**	2	190	201	206	217	160
54	1334	27,19	19200	2,2							
58	1228	25,03	18800	2,4							
65	1098	22,37	18300	2,6							
72	988	20,14	17800	2,8							
80	895	18,24	17300	3							
40	1807	36,84 (1)	14700	0,95	**iC 873 – HB3 132 M 4 B25G**	3	145	156	152	163	158
45	1602	32,66 (1)	15600	1,05							
52	1368	27,88	15200	1,2							
52	1366	27,84 (1)	15200	1,25	**iC 872 – HB3 132 M 4 B25G**	2	143	154	151	162	158
62	1148	23,4	14600	1,4							
68	1055	21,51	14400	1,45							
76	937	19,1	14000	1,55							
85	838	17,08 (1)	13700	1,7							
95	753	15,35	12600	1,8							
110	654	13,33	12900	2							
122	585	11,93	12500	2,1							
147	486	9,9 (1)	11900	2,4			135	146	143	154	
160	449	9,14 (1)	11800	2,7							
178	403	8,22	11500	2,9							
205	350	7,13	11000	3,1							
229	313	6,39	10700	3,3							
275	260	5,3 (1)	10100	3,5							

(1) Finite transmission ratio *i*

P_1 = 7,5 kW

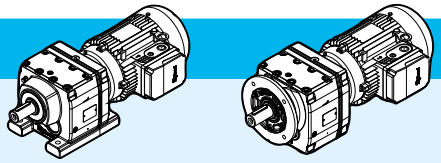

n_2 min^{-1}	M_2 N m	i	F_{r2} N	fs			kg foot HB	kg foot HBZ	kg flange HB	kg flange HBZ	p.
78	922	18,8	5520	0,85	**iC 772 – HB3 132 M 4 B20G**	2	108	119	114	125	156
82	874	17,82 (1)	5910	0,9							
94	765	15,6	6760	0,95							
104	689	14,05	7300	1,05							
118	605	12,33	7850	1,15							
134	534	10,88	7960	1,25							
151	473	9,64	7770	1,35			104	115	111	122	
170	422	8,59	7690	1,5							
189	380	7,74	7540	1,6							
215	333	6,79	7300	1,75							
244	294	5,99 (1)	7060	1,85							
275	261	5,31 (1)	6840	1,95							
115	623	12,7	4420	0,85	**iC 672 – HB3 132 M 4 B16G**	2	100	111	103	114	154
127	566	11,54	5010	0,9							
146	490	10	5740	0,95							
168	427	8,7 (1)	5900	1,05							
187	382	7,79	5600	1			98	109	101	112	
198	361	7,36 (1)	5760	1,05							
233	307	6,27	5570	1,1							
256	279	5,7	5450	1,1							
296	242	4,93	5270	1,2							
340	211	4,29	5100	1,3							
183	391	7,97	1120	0,95	**iC 572 – HB3 132 M 4 B16G**	2	90	101	93	104	152
194	369	7,53	1410	0,95							
228	314	6,41	2120	1,05							
251	286	5,82	2470	1,15							
289	248	5,05	2750	1,25							
333	215	4,39	2700	1,3							
200	357	14,77 (1)	2620	1,2	**iC 572 – HB3 132 SB 2 B16G**	2	87	98	90	101	152
212	338	13,95 (1)	2800	1,25							
249	287	11,88	2770	1,4							
274	261	10,79	2750	1,5							
317	226	9,35	2700	1,65							
371	193	7,97	2660	1,85			86	97	89	100	
393	182	7,53	2630	1,9							
462	155	6,41	2560	2,2							
508	141	5,82	2510	2,3							
587	122	5,05	2440	2,5							
674	106	4,39	2360	2,6							

(1) Finite transmission ratio *i*

P_1 = 9,2 kW

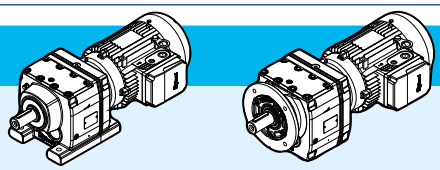

n_2 min^{-1}	M_2 N m	i	F_{r2} N	fs			kg foot HB	kg foot HBZ	kg flange HB	kg flange HBZ	p.
27	3202	53,21	10800	1	**iC 973 – HB3 132 MB 4 B30H**	3	196	208	212	224	160
31	2863	47,58	20600	1,1							
34	2574	42,78	20200	1,25							
39	2234	37,13	19800	1,4							
44	2001	33,25	19300	1,5							
53	1660	27,58	18600	1,7							
58	1506	25,03	18200	1,95	**iC 972 – HB3 132 MB 4 B30H**	2	192	204	208	220	160
65	1346	22,37	17800	2,1							
72	1212	20,14	17300	2,3							
80	1098	18,24	16900	2,4							
90	973	16,17	16400	2,6							
100	880	14,62	16000	2,8							
118	746	12,39	15300	3,1							
68	1294	21,51	13800	1,2	**iC 872 – HB3 132 MB 4 B25H**	2	145	157	153	165	158
76	1149	19,1	13500	1,3							
85	1028	17,08 (1)	13200	1,4							
95	924	15,35	12900	1,5							
110	802	13,33	12500	1,65							
122	718	11,93	12200	1,75							
147	596	9,9 (1)	11600	2							
160	550	9,14 (1)	11600	2,2			138	150	146	158	
178	495	8,22	11300	2,4							
205	429	7,13	10900	2,5							
229	384	6,39	10500	2,7							
104	846	14,05	4880	0,85	**iC 772 – HB3 132 MB 4 B20H**	2	110	122	117	129	156
118	742	12,33	5730	0,95							
134	655	10,88	6380	1							
151	580	9,64	6880	1,1			107	119	113	125	
189	466	7,74	6370	1,3							
215	409	6,79	6770	1,45							
244	361	5,99 (1)	6890	1,5							
275	320	5,31 (1)	6690	1,6							

P_1 = 11 kW

34	3057	42,78	17800	1,05	**iC 973 – HB3 160 M 4 B30H**	3	144	-	160	-	160
40	2653	37,13	18900	1,15							
44	2376	33,25	18600	1,25							
53	1971	27,58	18000	1,4							
59	1789	25,03	17600	1,65	**iC 972 – HB3 160 M 4 B30H**	2	140	-	156	-	160
66	1599	22,37	17200	1,75							
73	1439	20,14	16900	1,9							
81	1303	18,24	16500	2							
91	1156	16,17	16000	2,2							

(1) Finite transmission ratio *i*

P_1 = 11 kW

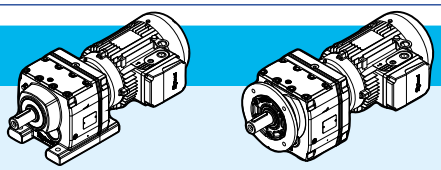

n_2 min^{-1}	M_2 N m	i	F_{r2} N	fs			kg foot HB	kg foot HBZ	kg flange HB	kg flange HBZ	p.
101	1045	14,62	15600	2,4	**iC 972 – HB3 160 M 4 B30H**	2	140	-	156	-	160
119	886	12,39	15000	2,6							
136	774	10,83	14500	2,9							
158	664	9,29	14200	3,3			128	-	144	-	
175	600	8,39	13800	3,5							
207	508	7,12	13100	3,9							
237	444	6,21	12600	4,3							
68	1537	21,51	13200	1	**iC 872 – HB3 160 M 4 B25H**	2	91	-	99	-	158
77	1365	19,1	13000	1,1							
86	1220	17,08 (1)	12700	1,15							
96	1097	15,35	12500	1,25							
110	952	13,33	12100	1,35							
123	853	11,93	11800	1,45							
148	707	9,9 (1)	11300	1,65							
161	653	9,14 (1)	11400	1,85			83	-	91	-	
179	587	8,22	11100	2							
206	510	7,13	10700	2,1							
230	457	6,39	10400	2,2							
277	379	5,3 (1)	9850	2,4							
135	777	10,88	4400	0,85	**iC 772 – HB3 160 M 4 B20H**	2	54	-	61	-	156
152	689	9,64	5130	0,9			51	-	58	-	
190	553	7,74	4740	1,1							
216	485	6,79	5340	1,2							
245	428	5,99 (1)	5800	1,25							
277	380	5,31 (1)	6140	1,35							

P_1 = 15 kW

53	2688	27.58	16500	1.05	**iC 973 – HB3 160 L 4 B30H**	3	144	-	160	-	160
59	2439	25,03	16300	1,2	**iC 972 – HB3 160 L 4 B30H**	2	140	-	156	-	160
66	2180	22,37	16100	1,3							
73	1963	20,14	15800	1,4							
81	1777	18,24	15500	1,5							
91	1576	16,17	15200	1,6							
101	1425	14,62	14900	1,75							
119	1208	12,39	14400	1,95							
136	1055	10,83	13900	2,1							
158	905	9,29	13800	2,4			128	-	144	-	
175	818	8,39	13400	2,5							
207	693	7,12	12800	2,9							
237	606	6,21	12300	3,1							
86	1664	17,08 (1)	11600	0,85	**iC 872 – HB3 160 L 4 B25H**	2	91	-	99	-	158
96	1496	15,35	11500	0,9							

(1) Finite transmission ratio *i*

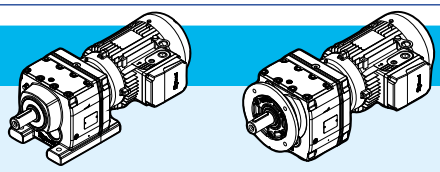

P_1 = 15 kW

n_2 min^{-1}	M_2 N m	i	F_{r2} N	fs			kg foot HB	kg foot HBZ	kg flange HB	kg flange HBZ	p.
110	1299	13,33	11300	1	iC 872 – HB3 160 L 4 B25H	2	91	-	99	-	158
123	1163	11,93	11100	1,1							
148	965	9,9 (1)	10700	1,25							
161	891	9,14 (1)	10900	1,35			83	-	91	-	
179	801	8,22	10700	1,45							
206	695	7,13	10300	1,55							
230	623	6,39	10000	1,65							
277	516	5.3 (1)	9570	1.75							

P_1 = 18,5 kW

73	2429	20,14	14900	1,1	iC 972 – HB3 180 M 4 B30L	2	140	-	156	-	160
80	2200	18,24	14700	1,2							
91	1951	16,17	14400	1,3							
100	1764	14,62	14200	1,4							
118	1495	12,39	13800	1,55							
135	1306	10,83	13400	1,7							
158	1120	9,29	13400	1,95			128	-	144	-	
175	1012	8,39	13100	2,1							
206	858	7,12	12500	2,4							
236	749	6,21	12100	2,5							
282	627	5,2	11500	2,9							
326	543	4,5 (1)	11100	3							
110	1607	13,33	10500	0,8	iC 872 – HB3 180 M 4 B25L	2	91	-	99	-	158
123	1439	11,93	10400	0,85							
148	1194	9,9 (1)	10200	1							
160	1103	9,14 (1)	10500	1,1			83	-	91	-	
178	991	8,22	10300	1,2							
205	860	7,13	10000	1,25							
229	770	6,39	9750	1,35							
276	639	5,3 (1)	9330	1,45							

P_1 = 22 kW

73	2879	20,14	14000	0,95	iC 972 – HB3 180 L 4 B30L	2	140	-	156	-	160
81	2607	18,24	13900	1							
91	2312	16,17	13700	1,1							
101	2090	14,62	13500	1,2							
119	1772	12,39	13200	1,3							
136	1547	10,83	12900	1,45							
158	1327	9,29	13100	1,65			128	-	144	-	
175	1200	8,39	12800	1,75							
207	1017	7,12	12300	2							
237	888	6,21	11900	2,1							

(1) Finite transmission ratio *i*

P_1 = 22 kW

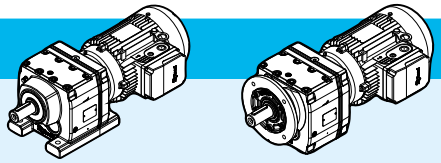

n_2 min^{-1}	M_2 N m	i	F_{r2} N	fs			kg foot HB	kg foot HBZ	kg flange HB	kg flange HBZ	p.
283	743	5,2	11300	2,4	**iC 972 – HB3 180 L 4 B30L**	2	128	-	144	-	160
327	643	4,5 (1)	10900	2,5							
148	1415	9,9 (1)	9630	0,85	**iC 872 – HB3 180 L 4 B25L**	2	91	-	99	-	158
161	1307	9,14 (1)	10100	0,95			83	-	91	-	
179	1175	8,22	9940	1							
206	1020	7,13	9680	1,05							
230	913	6,39	9470	1,1							
277	758	5,3 (1)	9100	1,2							

P_1 = 30 kW

101	2850	14,62	12000	0,85	**iC 972 – HB3 200 L 4 B30M**	2	146	-	162	-	160
119	2416	12,39	11900	0,95							
136	2110	10,83	11800	1,05							
158	1810	9,29	12300	1,2			134	-	150	-	
175	1636	8,39	12000	1,25							
207	1387	7,12	11700	1,45							
237	1211	6,21	11300	1,55							
283	1013	5,2	10900	1,75							
327	877	4,5 (1)	10500	1,85							

(1) Finite transmission ratio *i*

page intentionally left blank

10

Helical inline Dimensional drawings - iC

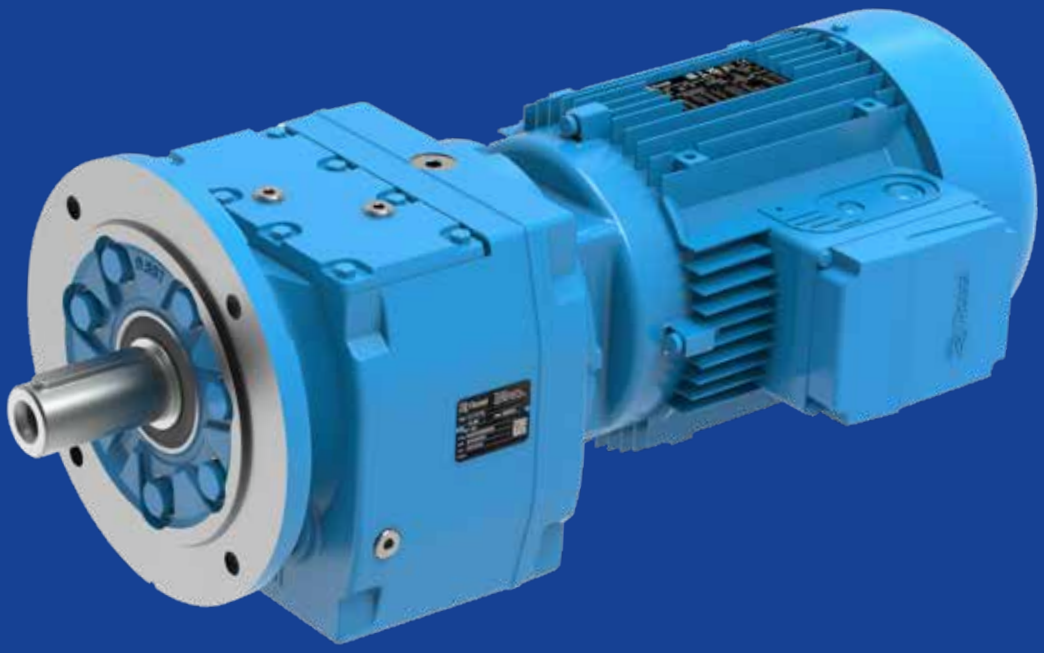

Section contents

10.1	iC 27...	146
10.2	iC 37...	148
10.3	iC 47...	150
10.4	iC 57...	152
10.5	iC 67...	154
10.6	iC 77..	156
10.7	iC 87...	158
10.8	iC 97...	160

10.1

iC 27...PE

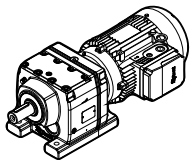

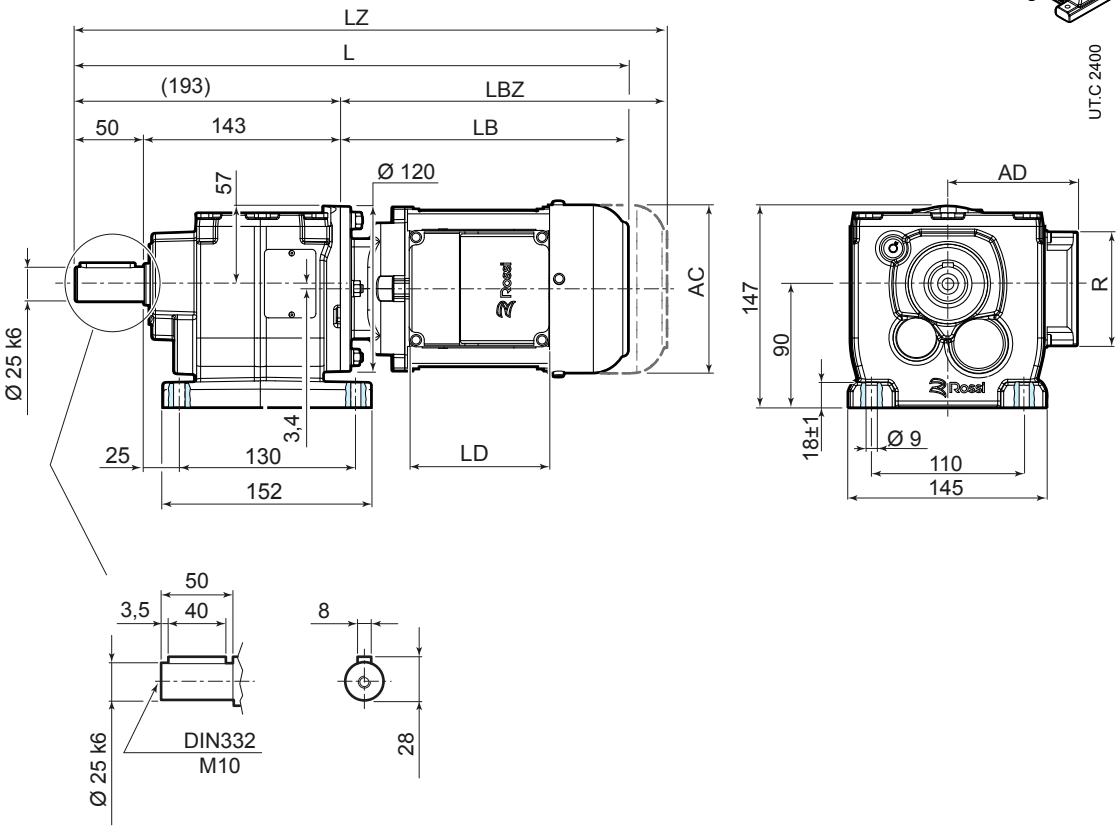

97 83 278

	63	71	80	90S [2) 3)]	90L [3)]	100 [3)]	112 [3)]
AC	123	138	156	176	176	194	218
AD	95	112	121	141	141	151	163
LB	211	237	266	290	320	351	389
LBZ	266	299	335	369	399	446	488
L [1)]	404	430	459	483	513	544	582
LZ [1)]	459	492	528	562	592	639	681
LD	103	103	103	136	136	136	136
R	86	86	86	106	106	106	106

[1)] See also pages 90, 91
[2)] For motors HB3-HB3Z 90S 2, HB3-HB3Z 90S 4, HB3-HB3Z 90S 6 dimensions as motor size 90L
[3)] The motor protrudes the gear reducer foot mounting surface

iC 27...FE

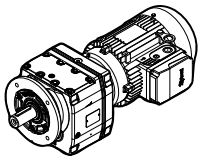

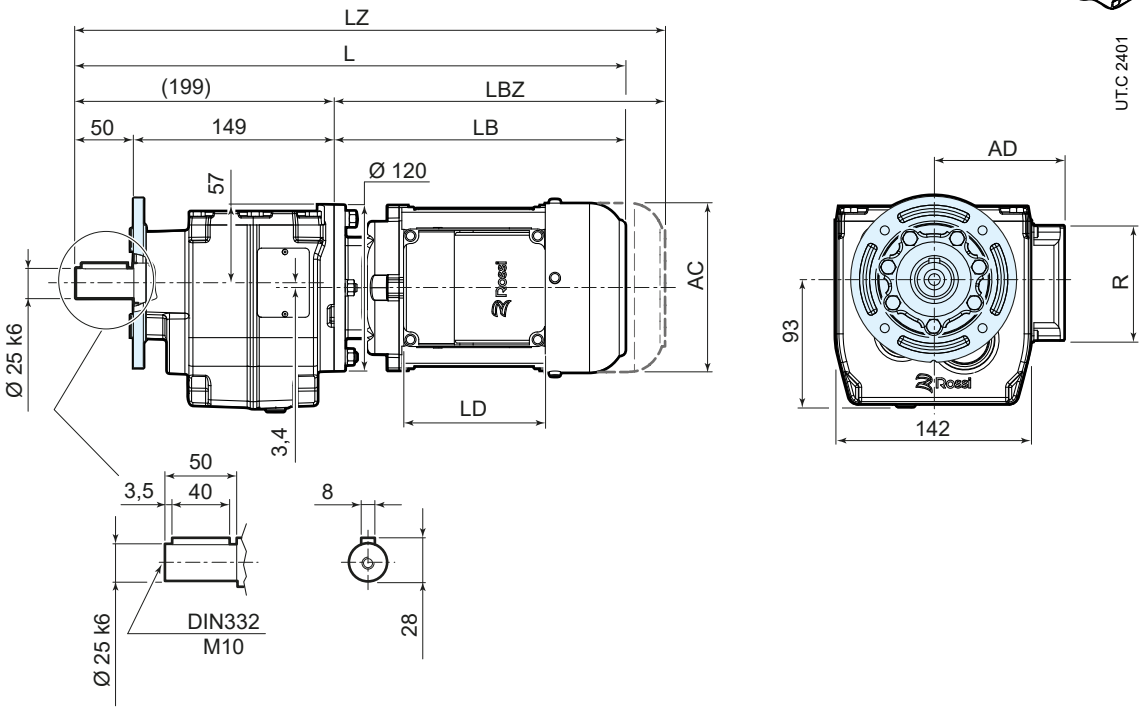

F212 Ø 120

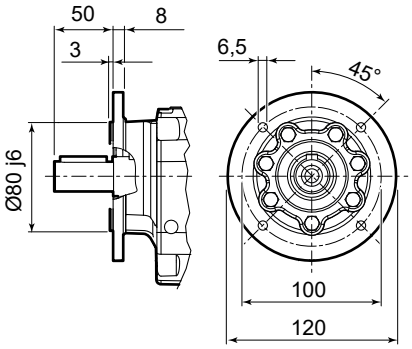

F214 Ø 140

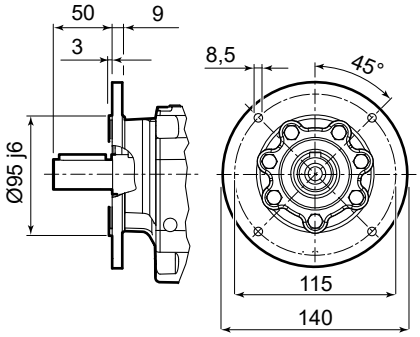

F216 Ø 160

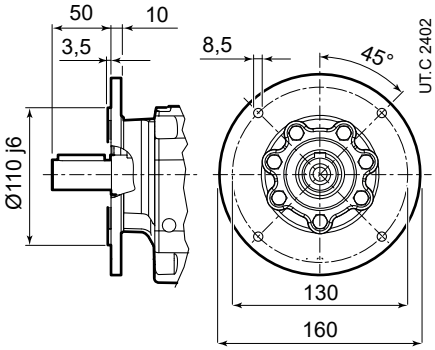

97 83 278

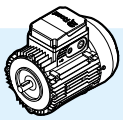

	63	71	80	90S [2]	90L	100	112
AC	123	138	156	176	176	194	218
AD	95	112	121	141	141	151	163
LB	211	237	266	290	320	351	389
LBZ	266	299	335	369	399	446	488
L [1]	410	436	465	489	519	550	588
LZ [1]	465	498	534	568	598	645	687
LD	103	103	103	136	136	136	136
R	86	86	86	106	106	106	106

[1] See also pages 90, 91

[2] For motors HB3-HB3Z 90S 2, HB3-HB3Z 90S 4, HB3-HB3Z 90S 6 dimensions as motor size 90L

10.2

iC 37...PE

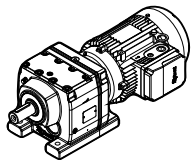

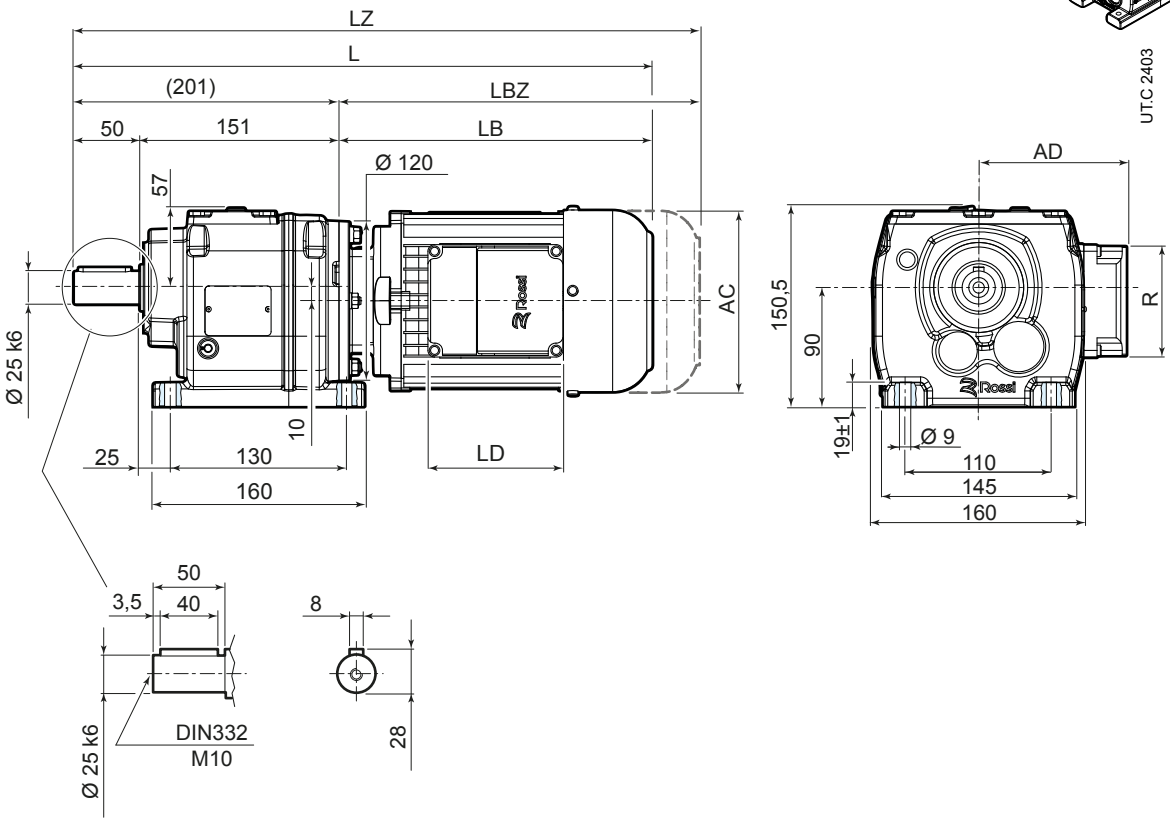

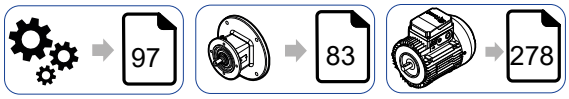

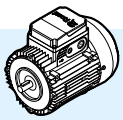	63	71	80 [3]	90S [2] [3]	90L [3]	100 [3]	112 [3]
AC	123	138	156	176	176	194	218
AD	95	112	121	141	141	151	163
LB	211	237	266	290	320	351	389
LBZ	266	299	335	369	399	446	488
L [1]	412	438	467	491	521	552	590
LZ [1]	467	500	536	570	600	647	689
LD	103	103	103	136	136	136	136
R	86	86	86	106	106	106	106

[1] See also pages 90, 91
[2] For motors HB3-HB3Z 90S 2, HB3-HB3Z 90S 4, HB3-HB3Z 90S 6 dimensions as motor size 90L
[3] The motor protrudes the gear reducer foot mounting surface

iC 37...FE

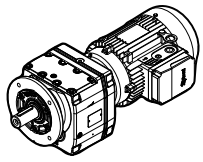

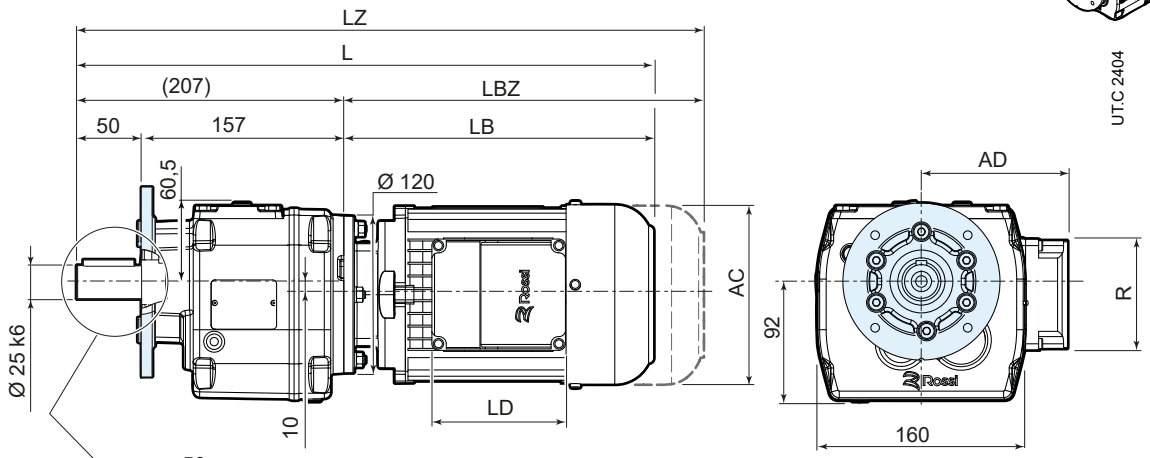

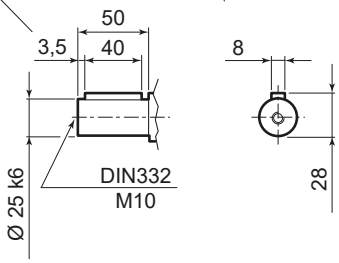

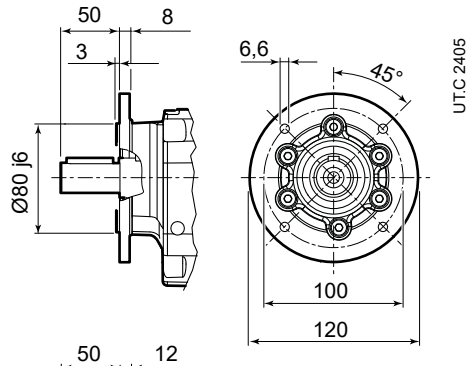

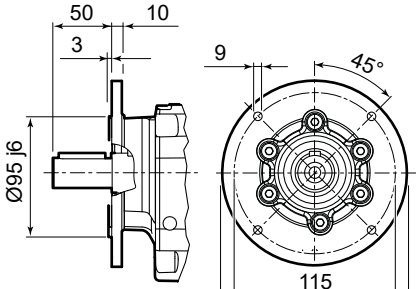

F314
Ø 140

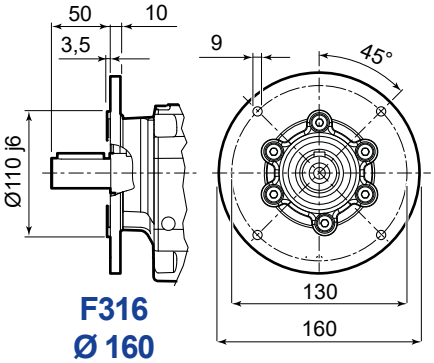

F316
Ø 160

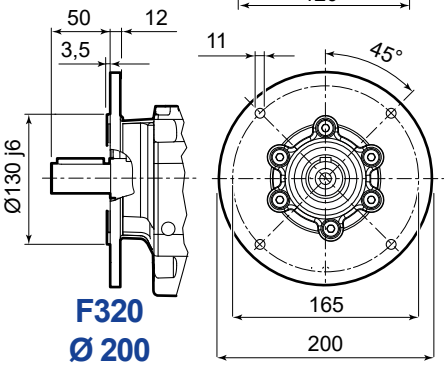

F320
Ø 200

97 83 278

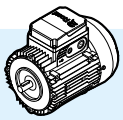

	63	71	80	90S [2]	90L	100	112
AC	123	138	156	176	176	194	218
AD	95	112	121	141	141	151	163
LB	211	237	266	290	320	351	389
LBZ	266	299	335	369	399	446	488
L [1]	418	444	473	497	527	558	596
LZ [1]	473	506	542	576	606	653	695
LD	103	103	103	136	136	136	136
R	86	86	86	106	106	106	106

[1] See also pages 90, 91

[2] For motors HB3-HB3Z 90S 2, HB3-HB3Z 90S 4, HB3-HB3Z 90S 6 dimensions as motor size 90L

10.3

iC 47...PE

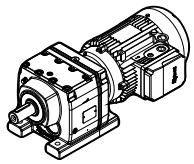

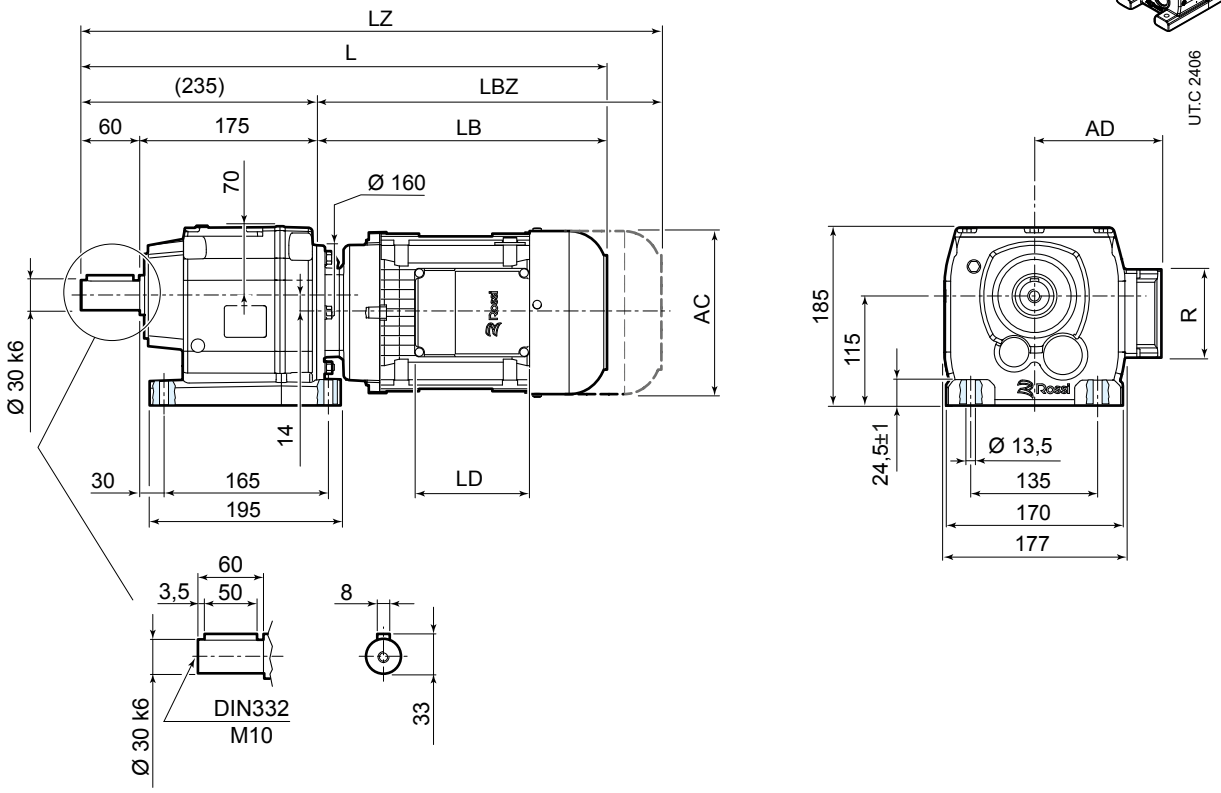

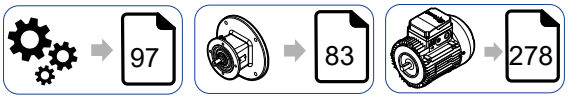

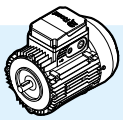	63	71	80	90S [2]	90L	100 [4]	112 [4]	132S [3] [4]	132M [4]
AC	123	138	156	176	176	194	218	257	257
AD	95	112	121	141	141	151	163	194	194
LB	205	231	260	283	313	345	383	439	499
LBZ	260	293	329	362	392	440	482	547	607
L [1]	440	466	495	518	548	580	618	674	734
LZ [1]	495	528	564	597	627	675	717	782	842
LD	103	103	103	136	136	136	136	190	190
R	86	86	86	106	106	106	106	148	148

[1] See also pages 90, 91
[2] For motors HB3-HB3Z 90S 2, HB3-HB3Z 90S 4, HB3-HB3Z 90S 6 dimensions as motor size 90L
[3] For motors HB3-HB3Z 132 SB 2, HB3-HB3Z 132SC 2, HB3-HB3Z 132S 4 dimensions as motor size 132M
[4] The motor protrudes the gear reducer foot mounting surface

iC 47...FE

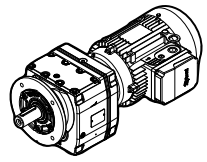

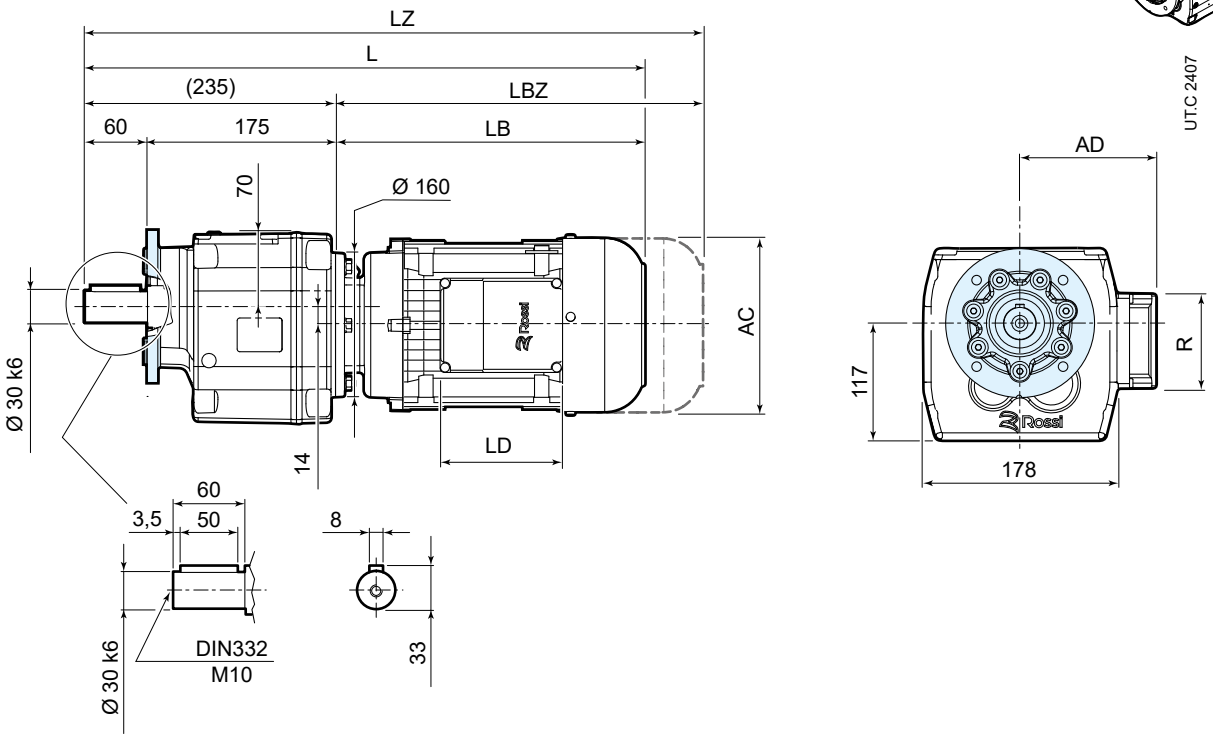

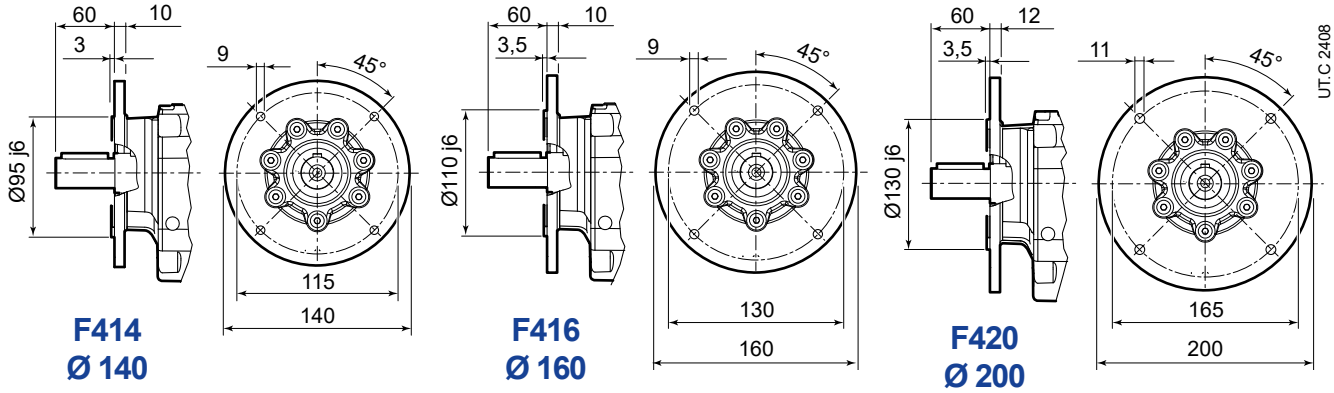

97 83 278

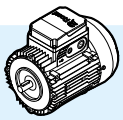

	63	71	80	90S [2]	90L	100	112	132S [3]	132M
AC	123	138	156	176	176	194	218	257	257
AD	95	112	121	141	141	151	163	194	194
LB	205	231	260	283	313	345	383	439	499
LBZ	260	293	329	362	392	440	482	547	607
L [1]	440	466	495	518	548	580	618	674	734
LZ [1]	495	528	564	597	627	675	717	782	842
LD	103	103	103	136	136	136	136	190	190
R	86	86	86	106	106	106	106	148	148

[1] See also pages 90, 91
[2] For motors HB3-HB3Z 90S 2, HB3-HB3Z 90S 4, HB3-HB3Z 90S 6 dimensions as motor size 90L
[3] For motors HB3-HB3Z 132 SB 2, HB3-HB3Z 132SC 2, HB3-HB3Z 132S 4 dimensions as motor size 132M

10.4

iC 57...PE

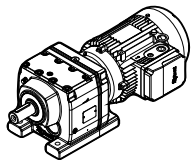

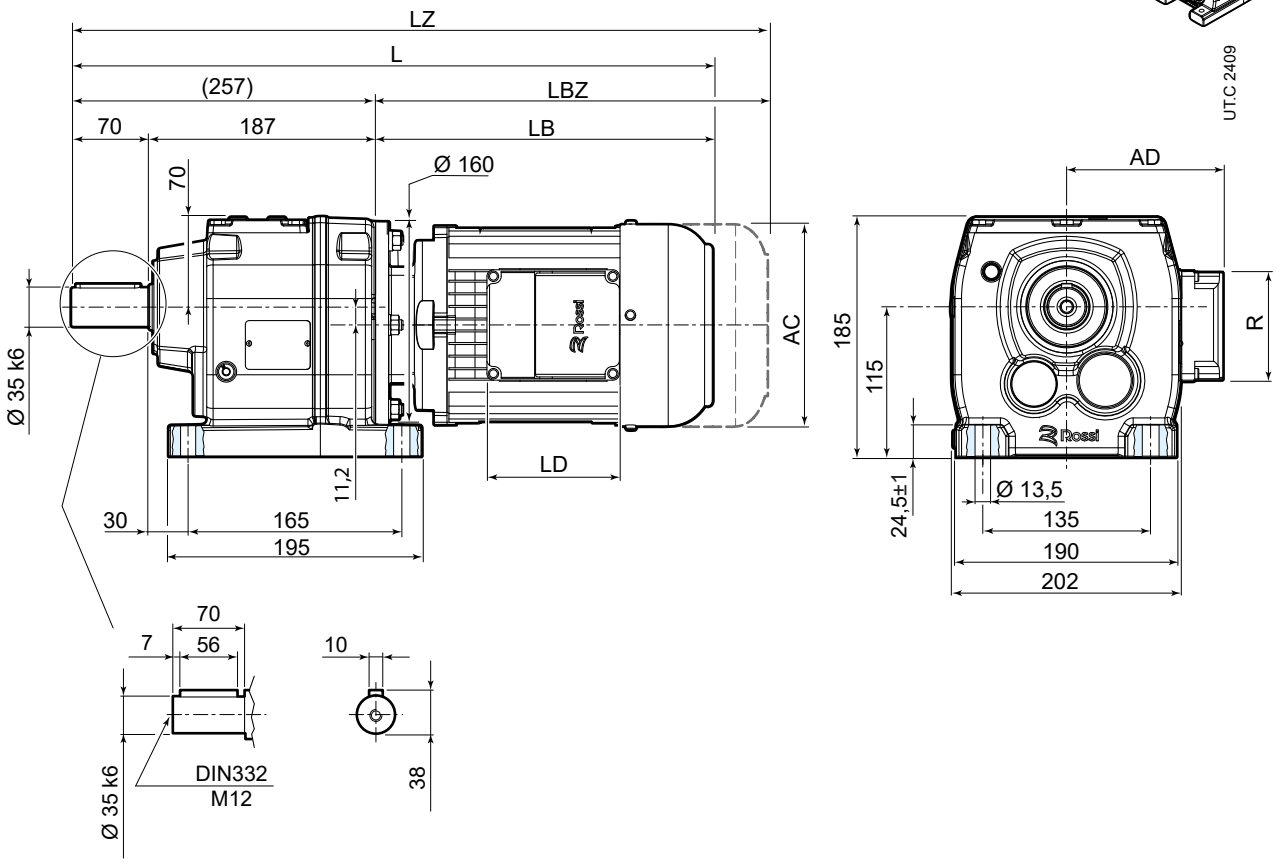

97 83 278

	63	71	80	90S [2]	90L	100	112 [4]	132S [3] [4]	132M [4]
AC	123	138	156	176	176	194	218	257	257
AD	95	112	121	141	141	151	163	194	194
LB	205	231	260	283	313	345	383	439	499
LBZ	260	293	329	362	392	440	482	547	607
L [1]	462	488	517	540	570	602	640	696	756
LZ [1]	517	550	586	619	649	697	739	804	864
LD	103	103	103	136	136	136	136	190	190
R	86	86	86	106	106	106	106	148	148

[1] See also pages 90, 91
[2] For motors HB3-HB3Z 90S 2, HB3-HB3Z 90S 4, HB3-HB3Z 90S 6 dimensions as motor size 90L
[3] For motors HB3-HB3Z 132 SB 2, HB3-HB3Z 132SC 2, HB3-HB3Z 132S 4 dimensions as motor size 132M
[4] The motor protrudes the gear reducer foot mounting surface

iC 57...FE

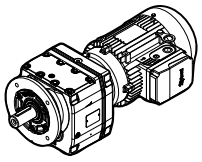

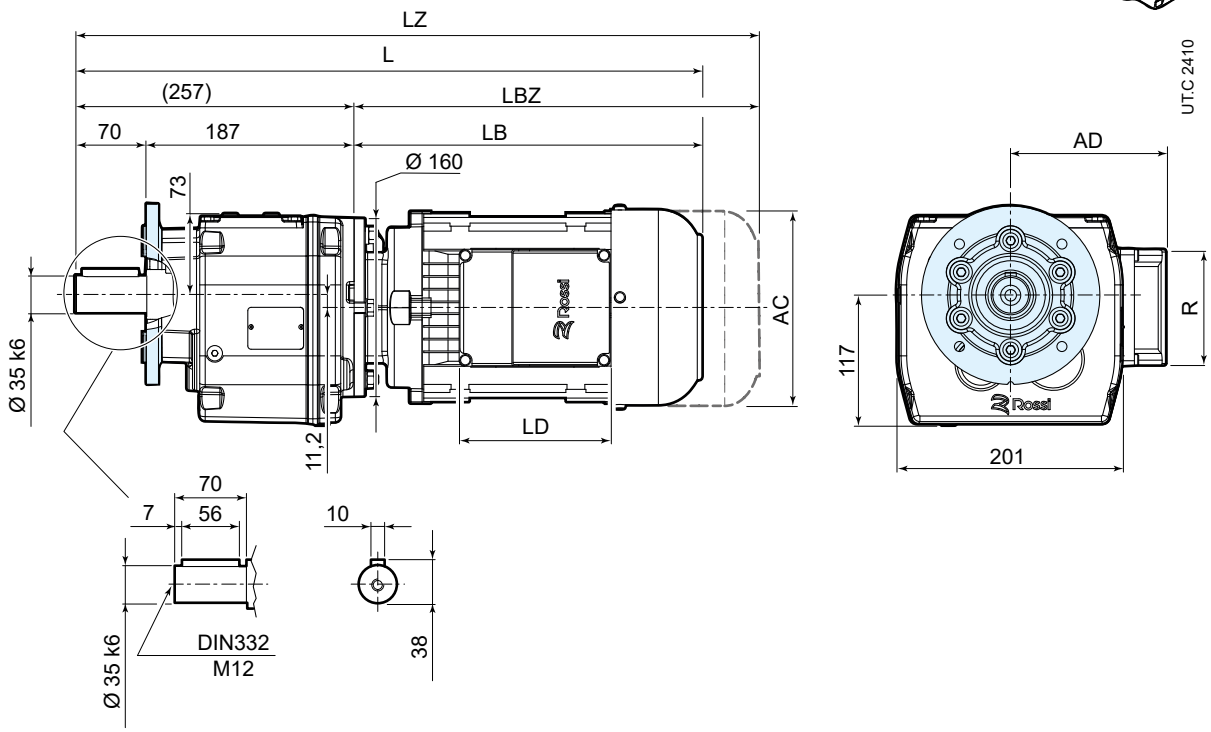

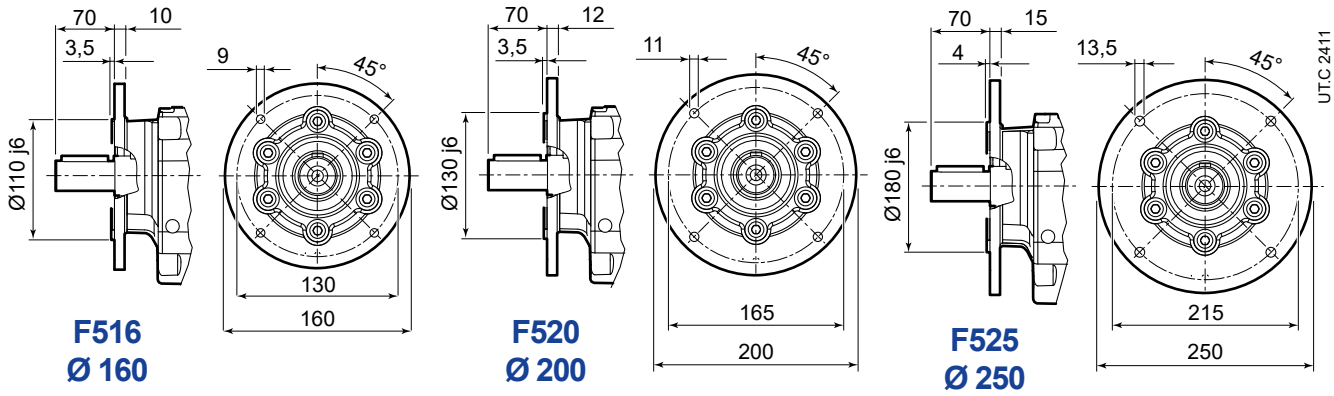

97 83 278

	63	71	80	90S [2]	90L	100	112	132S [3]	132M
AC	123	138	156	176	176	194	218	257	257
AD	95	112	121	141	141	151	163	194	194
LB	205	231	260	283	313	345	383	439	499
LBZ	260	293	329	362	392	440	482	547	607
L [1]	462	488	517	540	570	602	640	696	756
LZ [1]	517	550	586	619	649	697	739	804	864
LD	103	103	103	136	136	136	136	190	190
R	86	86	86	106	106	106	106	148	148

[1] See also pages 90, 91
[2] For motors HB3-HB3Z 90S 2, HB3-HB3Z 90S 4, HB3-HB3Z 90S 6 dimensions as motor size 90L
[3] For motors HB3-HB3Z 132 SB 2, HB3-HB3Z 132SC 2, HB3-HB3Z 132S 4 dimensions as motor size 132M

10.5

iC 67...PE

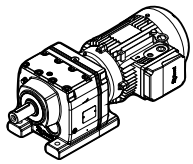

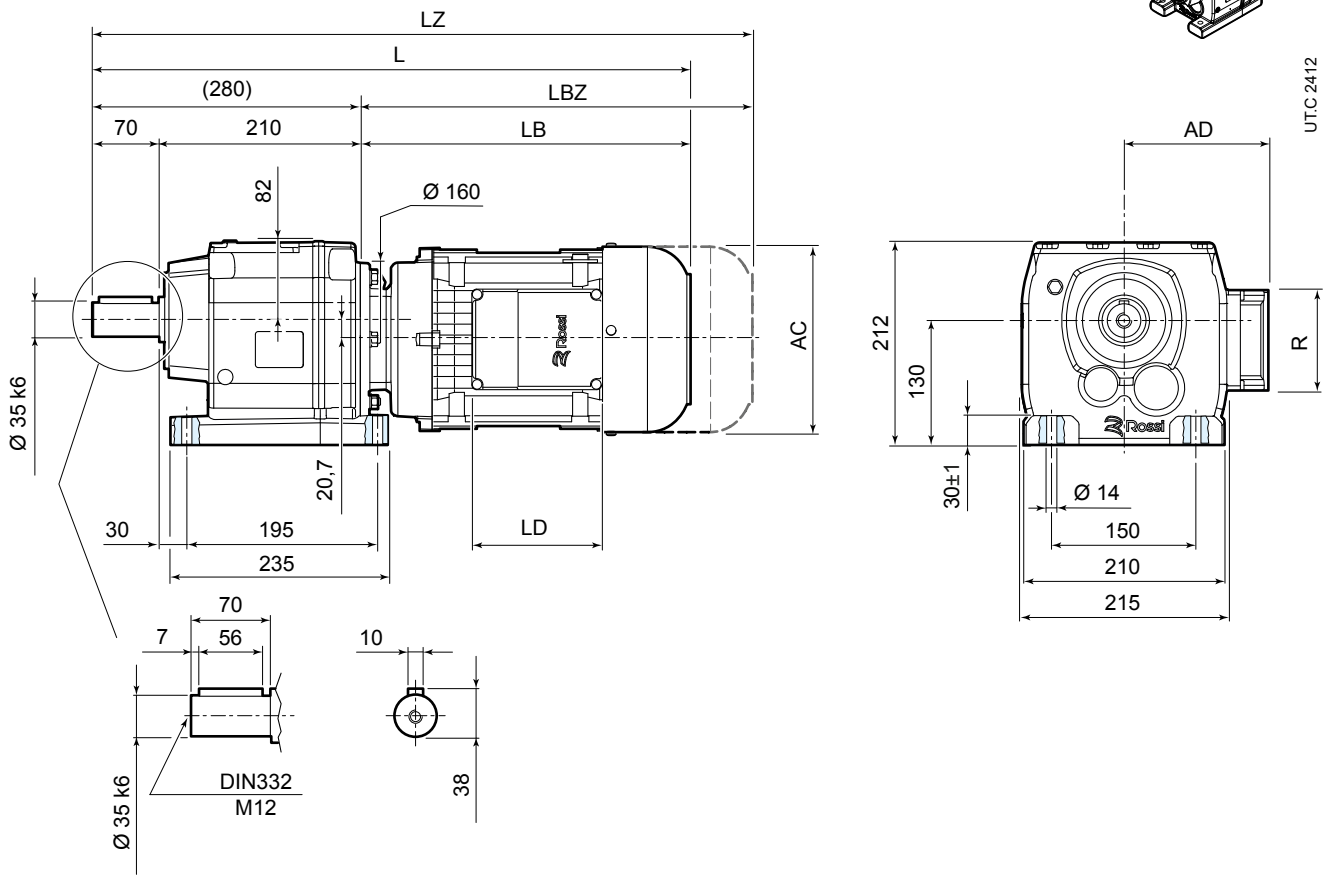

97 83 278

	63	71	80	90S [2]	90L	100	112 [4]	132S [3] [4]	132M [4]
AC	123	138	156	176	176	194	218	257	257
AD	95	112	121	141	141	151	163	194	194
LB	205	231	260	283	313	345	383	439	499
LBZ	260	293	329	362	392	440	482	547	607
L [1]	485	511	540	563	593	625	663	719	779
LZ [1]	540	573	609	642	672	720	762	827	887
LD	103	103	103	136	136	136	136	190	190
R	86	86	86	106	106	106	106	148	148

[1] See also pages 90, 91
[2] For motors HB3-HB3Z 90S 2, HB3-HB3Z 90S 4, HB3-HB3Z 90S 6 dimensions as motor size 90L
[3] For motors HB3-HB3Z 132 SB 2, HB3-HB3Z 132SC 2, HB3-HB3Z 132S 4 dimensions as motor size 132M
[4] The motor protrudes the gear reducer foot mounting surface

iC 67...FE

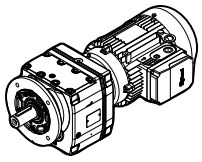

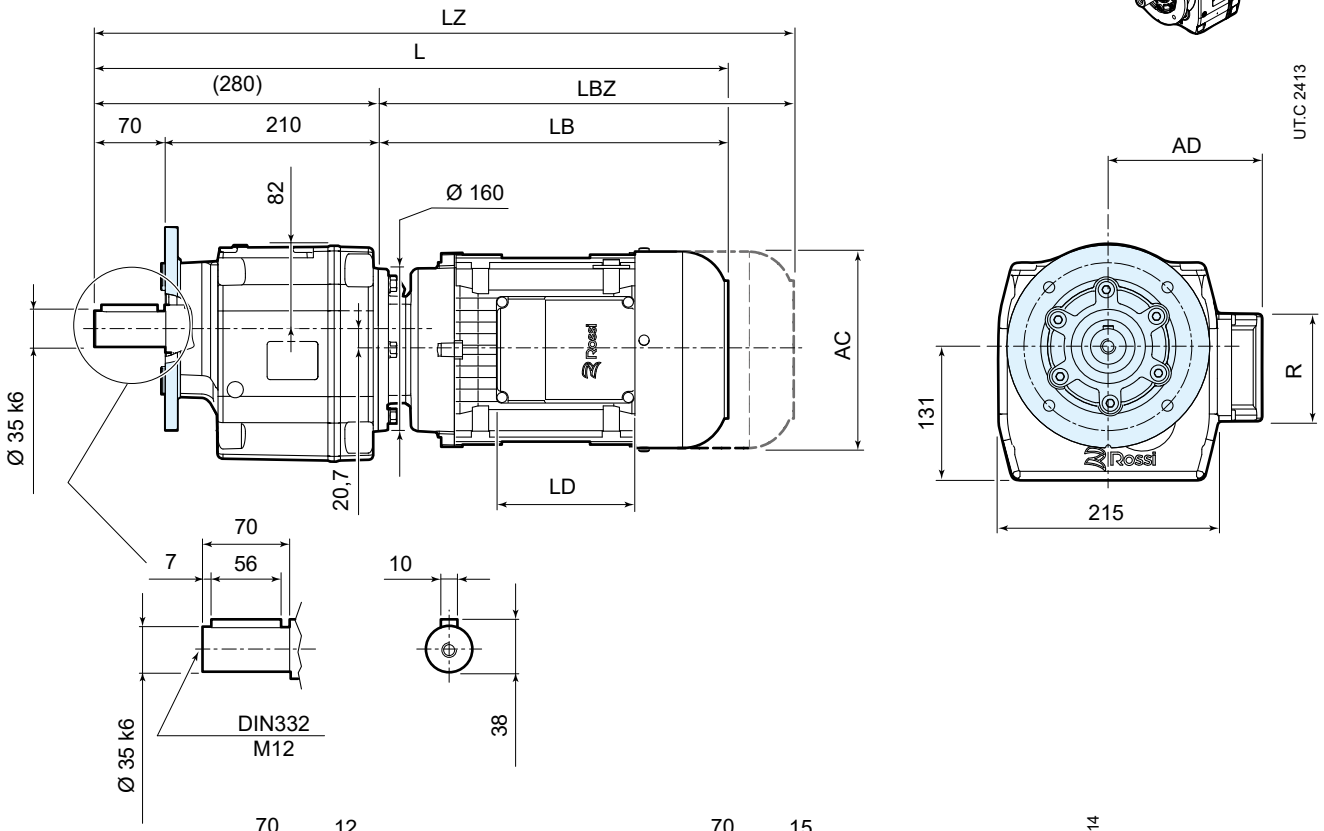

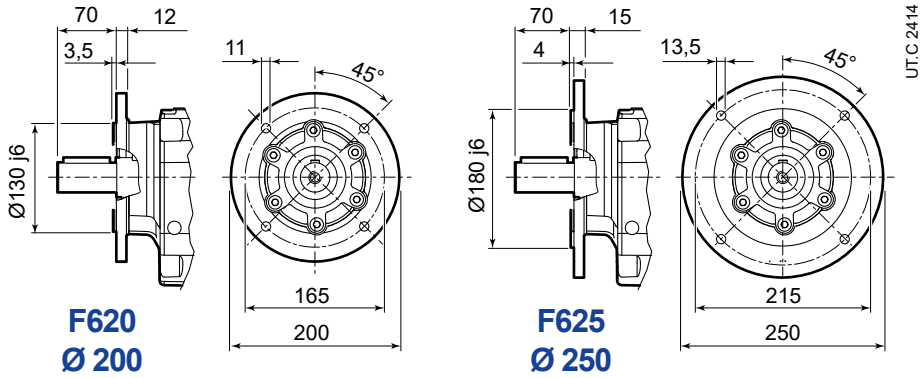

F620
Ø 200

F625
Ø 250

97 83 278

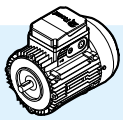

	63	71	80	90S [2]	90L	100	112	132S [3]	132M
AC	123	138	156	176	176	194	218	257	257
AD	95	112	121	141	141	151	163	194	194
LB	205	231	260	283	313	345	383	439	499
LBZ	260	293	329	362	392	440	482	547	607
L [1]	485	511	540	563	593	625	663	719	779
LZ [1]	540	573	609	642	672	720	762	827	887
LD	103	103	103	136	136	136	136	190	190
R	86	86	86	106	106	106	106	148	148

[1] See also pages 90, 91
[2] For motors HB3-HB3Z 90S 2, HB3-HB3Z 90S 4, HB3-HB3Z 90S 6 dimensions as motor size 90L
[3] For motors HB3-HB3Z 132 SB 2, HB3-HB3Z 132SC 2, HB3-HB3Z 132S 4 dimensions as motor size 132M

10.6

iC 77...PE

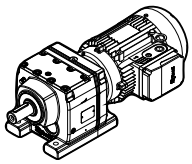

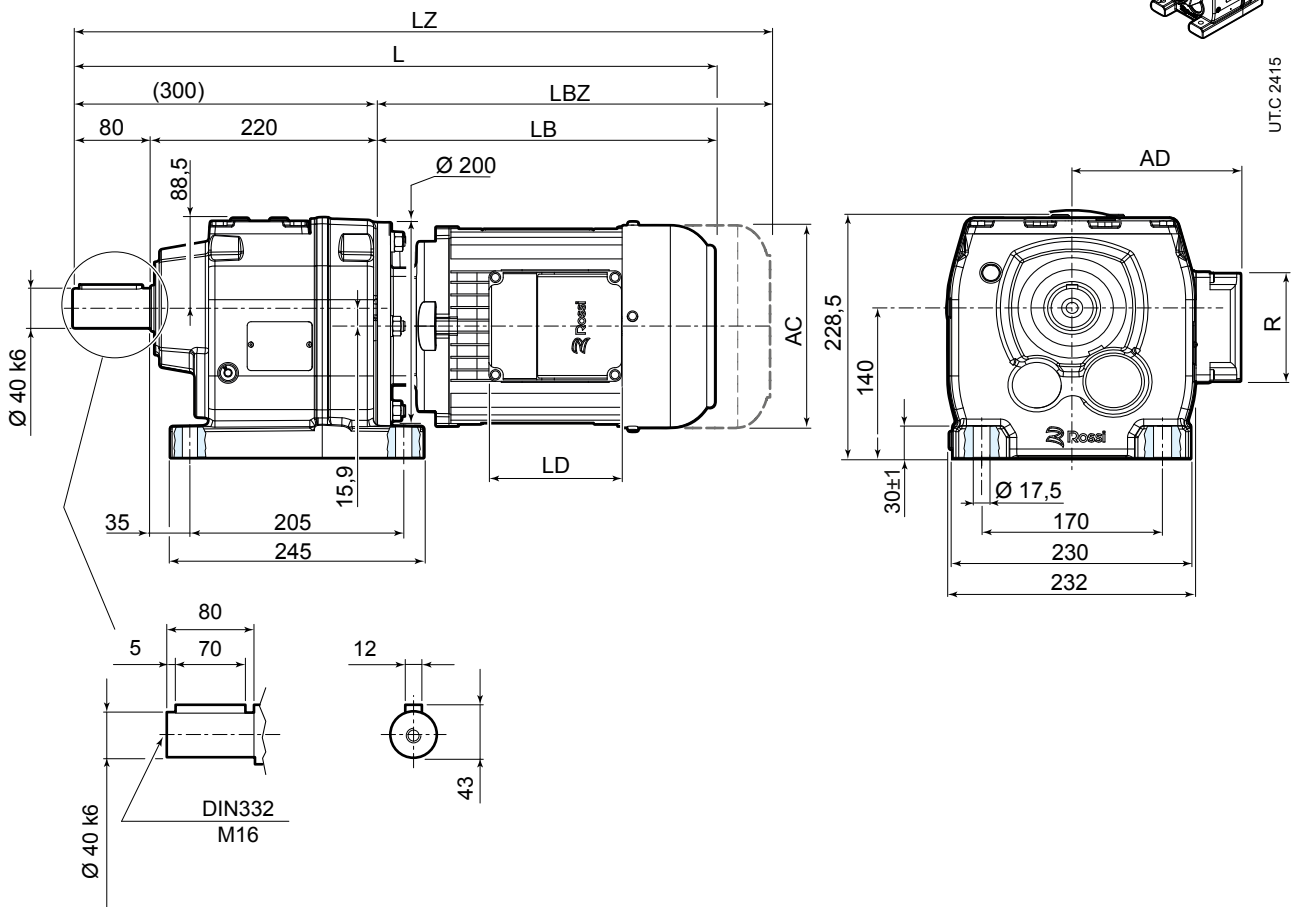

97 83 278

	63	71	80	90S [2]	90L	100	112	132S [3] [4]	132M [4]
AC	123	138	156	176	176	194	218	257	257
AD	95	112	121	141	141	151	163	194	194
LB	199	225	254	276	306	339	377	433	493
LBZ	254	287	323	355	385	434	476	541	601
L [1]	499	525	554	576	606	639	677	733	793
LZ [1]	554	587	623	655	685	734	776	841	901
LD	103	103	103	136	136	136	136	190	190
R	86	86	86	106	106	106	106	148	148

[1] See also pages 90, 91
[2] For motors HB3-HB3Z 90S 2, HB3-HB3Z 90S 4, HB3-HB3Z 90S 6 dimensions as motor size 90L
[3] For motors HB3-HB3Z 132 SB 2, HB3-HB3Z 132SC 2, HB3-HB3Z 132S 4 dimensions as motor size 132M
[4] The motor protrudes the gear reducer foot mounting surface

iC 77...FE

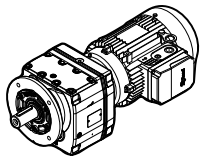

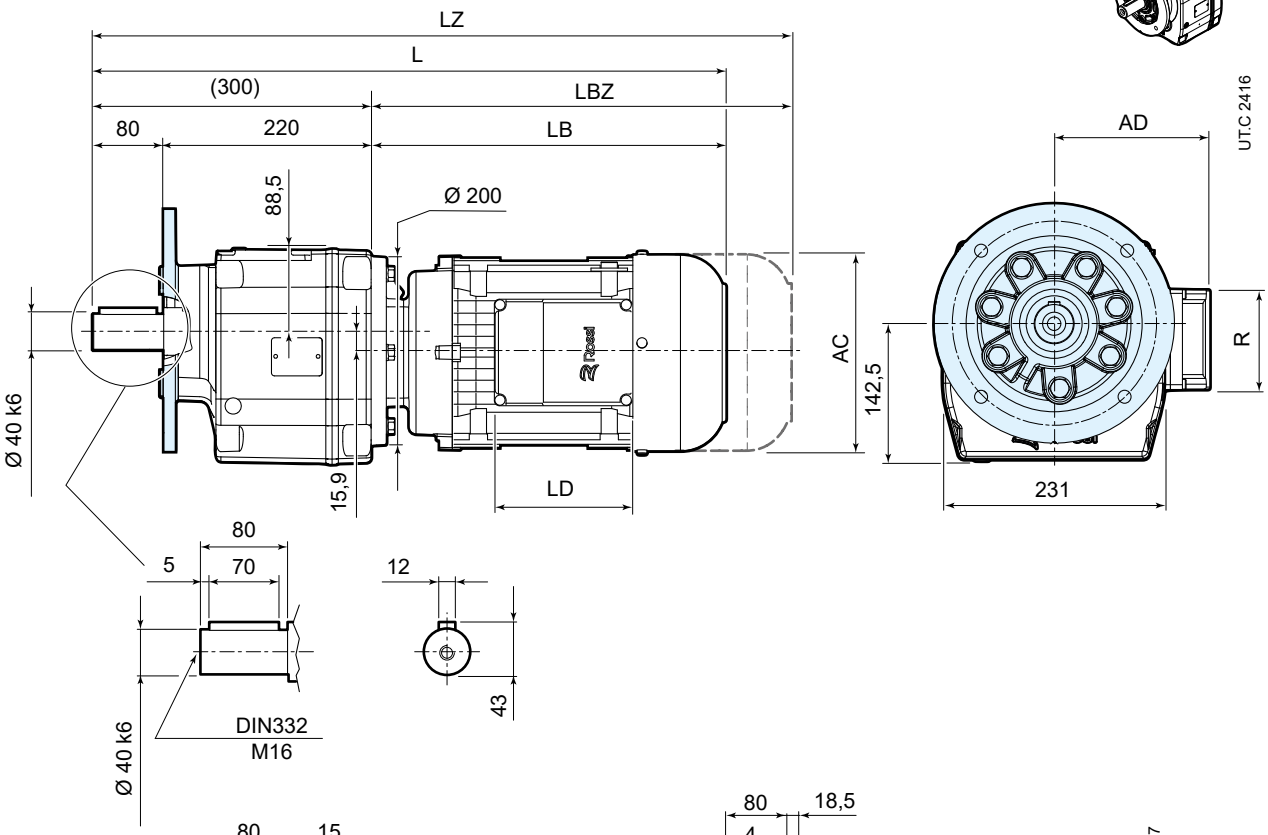

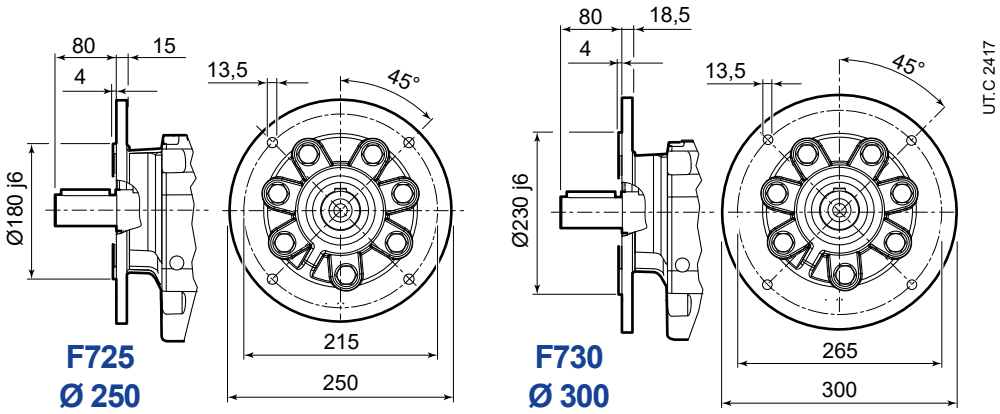

97 83 278

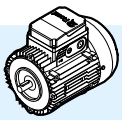

	63	71	80	90S [2]	90L	100	112	132S [3]	132M
AC	123	138	156	176	176	194	218	257	257
AD	95	112	121	141	141	151	163	194	194
LB	199	225	254	276	306	339	377	433	493
LBZ	254	287	323	355	385	434	476	541	601
L [1]	499	525	554	576	606	639	677	733	793
LZ [1]	554	587	623	655	685	734	776	841	901
LD	103	103	103	136	136	136	136	190	190
R	86	86	86	106	106	106	106	148	148

[1] See also pages 90, 91
[2] For motors HB3-HB3Z 90S 2, HB3-HB3Z 90S 4, HB3-HB3Z 90S 6 dimensions as motor size 90L
[3] For motors HB3-HB3Z 132 SB 2, HB3-HB3Z 132SC 2, HB3-HB3Z 132S 4 dimensions as motor size 132M

10.7

iC 87...PE

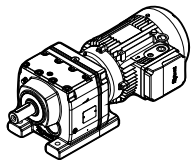

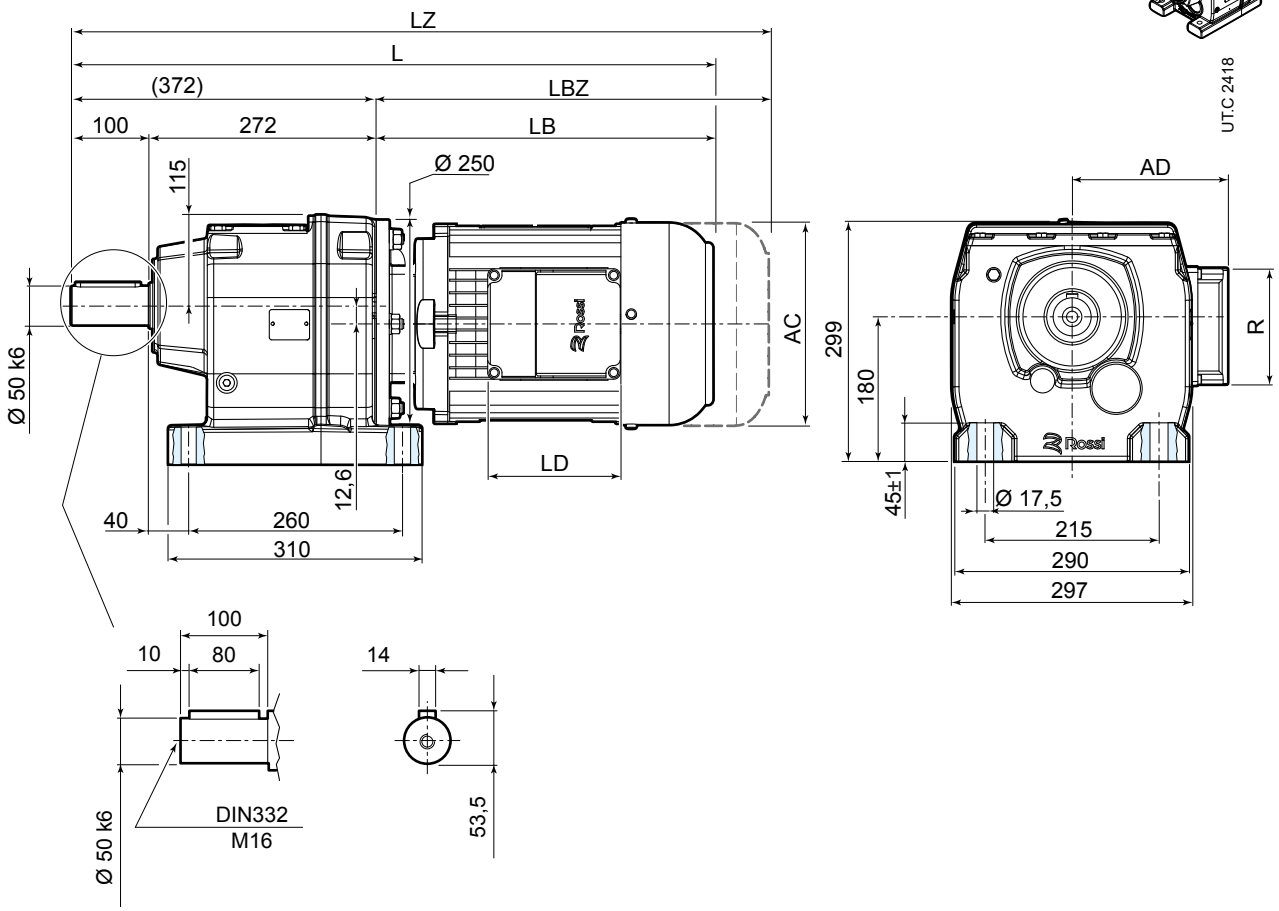

97 83 278

	80	90S [2]	90L	100	112	132S [3]	132M
AC	156	176	176	194	218	257	257
AD	121	141	141	151	163	194	194
LB	249	272	302	334	372	428	488
LBZ	318	351	381	429	471	536	596
L [1]	621	644	674	706	744	800	860
LZ [1]	690	723	753	801	843	908	968
LD	103	136	136	136	136	190	190
R	86	106	106	106	106	148	148

[1] See also pages 90, 91
[2] For motors HB3-HB3Z 90S 2, HB3-HB3Z 90S 4, HB3-HB3Z 90S 6 dimensions as motor size 90L
[3] For motors HB3-HB3Z 132 SB 2, HB3-HB3Z 132SC 2, HB3-HB3Z 132S 4 dimensions as motor size 132M

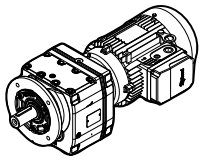

iC 87...FE

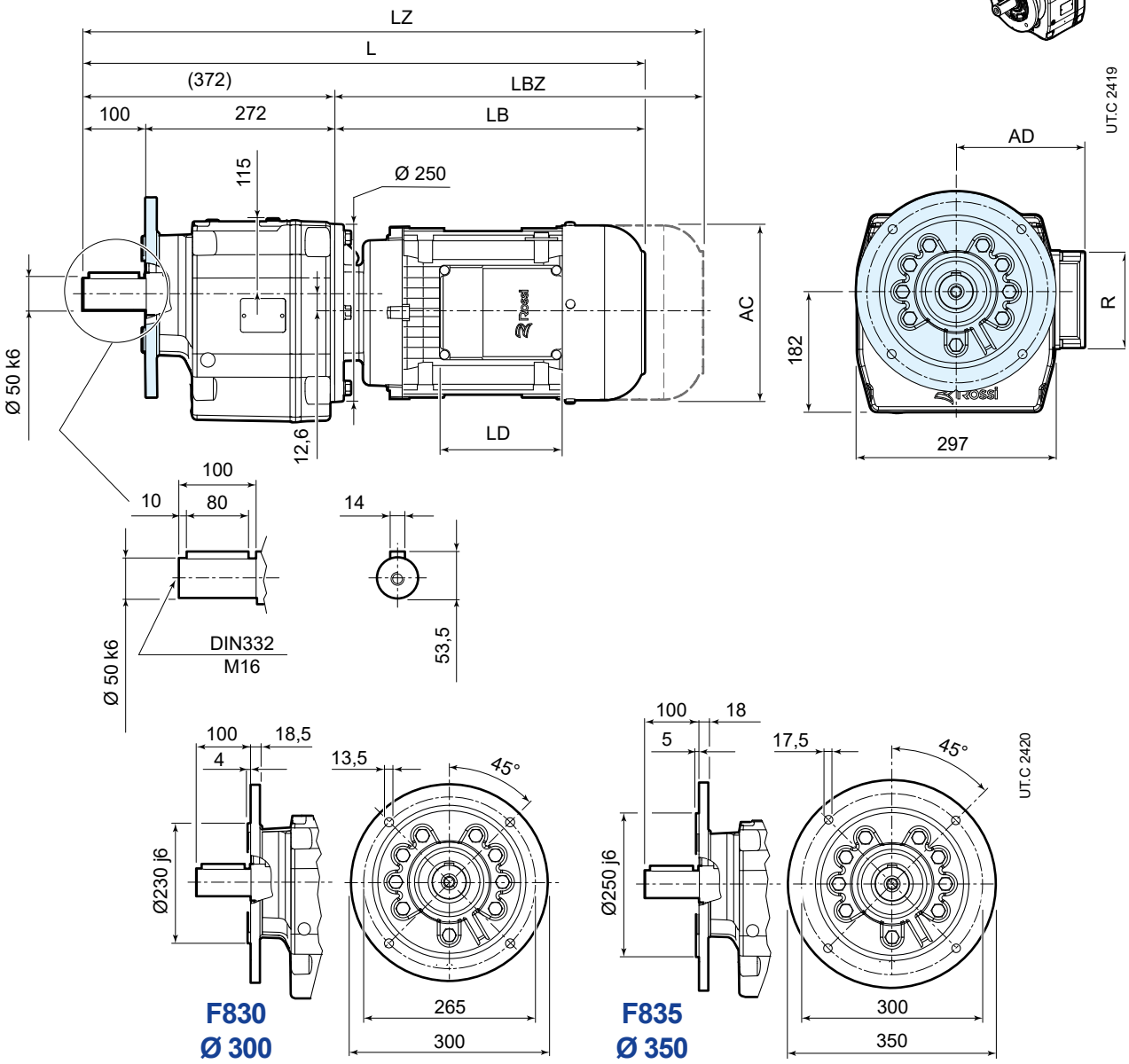

97 83 278

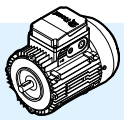

	80	90S [2]	90L	100	112	132S [3]	132M
AC	156	176	176	194	218	257	257
AD	121	141	141	151	163	194	194
LB	249	272	302	334	372	428	488
LBZ	318	351	381	429	471	536	596
L [1]	621	644	674	706	744	800	860
LZ [1]	690	723	753	801	843	908	968
LD	103	136	136	136	136	190	190
R	86	106	106	106	106	148	148

[1] See also pages 90, 91
[2] For motors HB3-HB3Z 90S 2, HB3-HB3Z 90S 4, HB3-HB3Z 90S 6 dimensions as motor size 90L
[3] For motors HB3-HB3Z 132 SB 2, HB3-HB3Z 132SC 2, HB3-HB3Z 132S 4 dimensions as motor size 132M

10.8

iC 97...PE

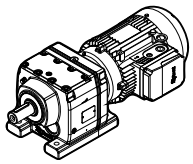

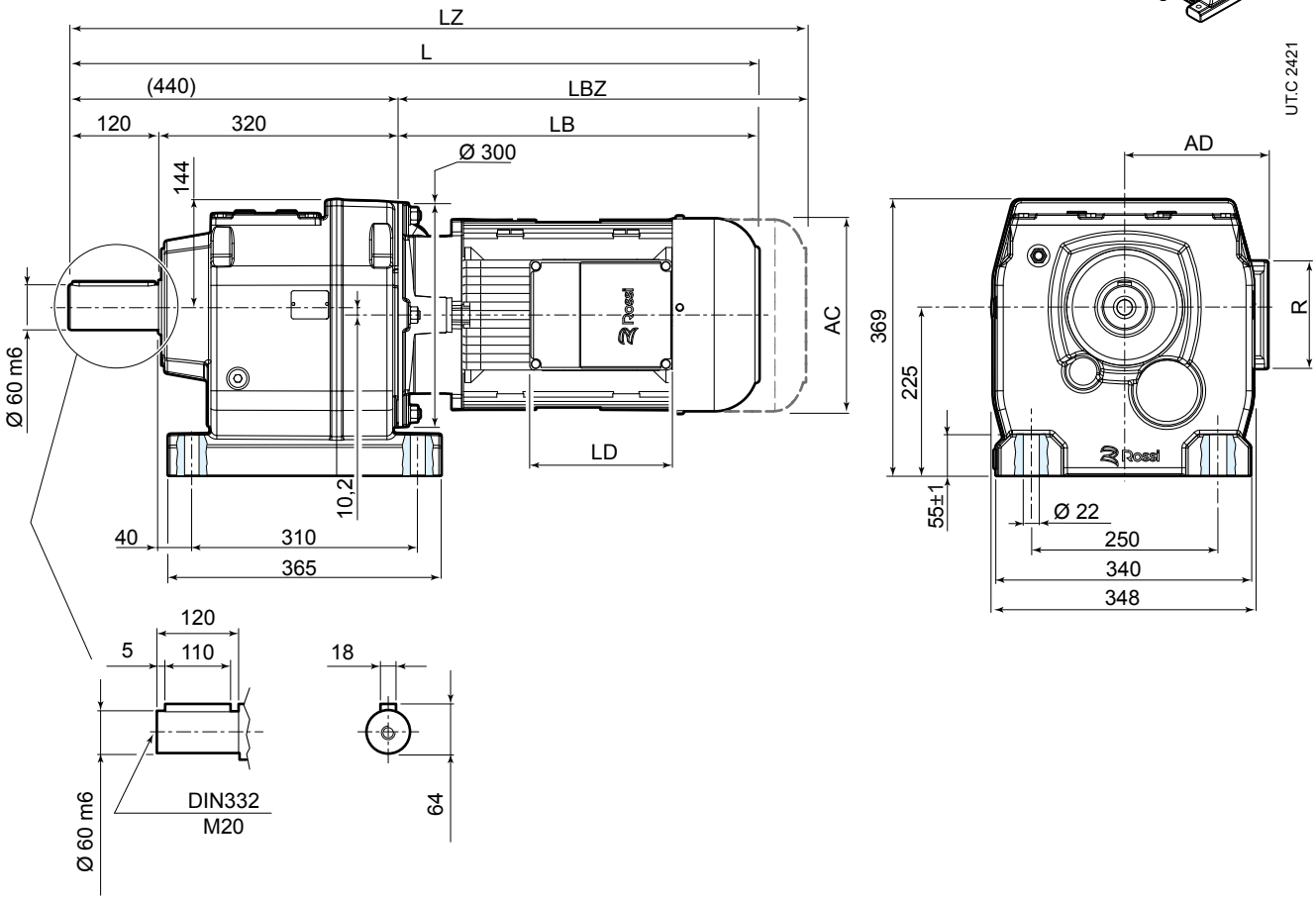

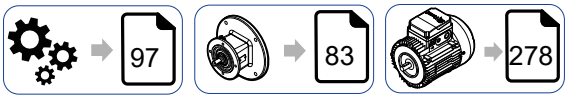

	80	90S [2]	90L	100	112	132S [3]	132M
AC	156	176	176	194	218	257	257
AD	121	141	141	151	163	194	194
LB	242	264	294	327	364	423	483
LBZ	311	343	373	422	463	531	591
L [1]	682	704	734	767	804	863	923
LZ [1]	751	783	813	862	903	971	1031
LD	103	136	136	136	136	190	190
R	86	106	106	106	106	148	148

[1] See also pages 90, 91
[2] For motors HB3-HB3Z 90S 2, HB3-HB3Z 90S 4, HB3-HB3Z 90S 6 dimensions as motor size 90L
[3] For motors HB3-HB3Z 132 SB 2, HB3-HB3Z 132SC 2, HB3-HB3Z 132S 4 dimensions as motor size 132M

iC 97...FE

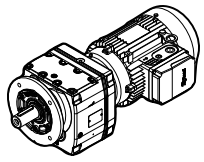

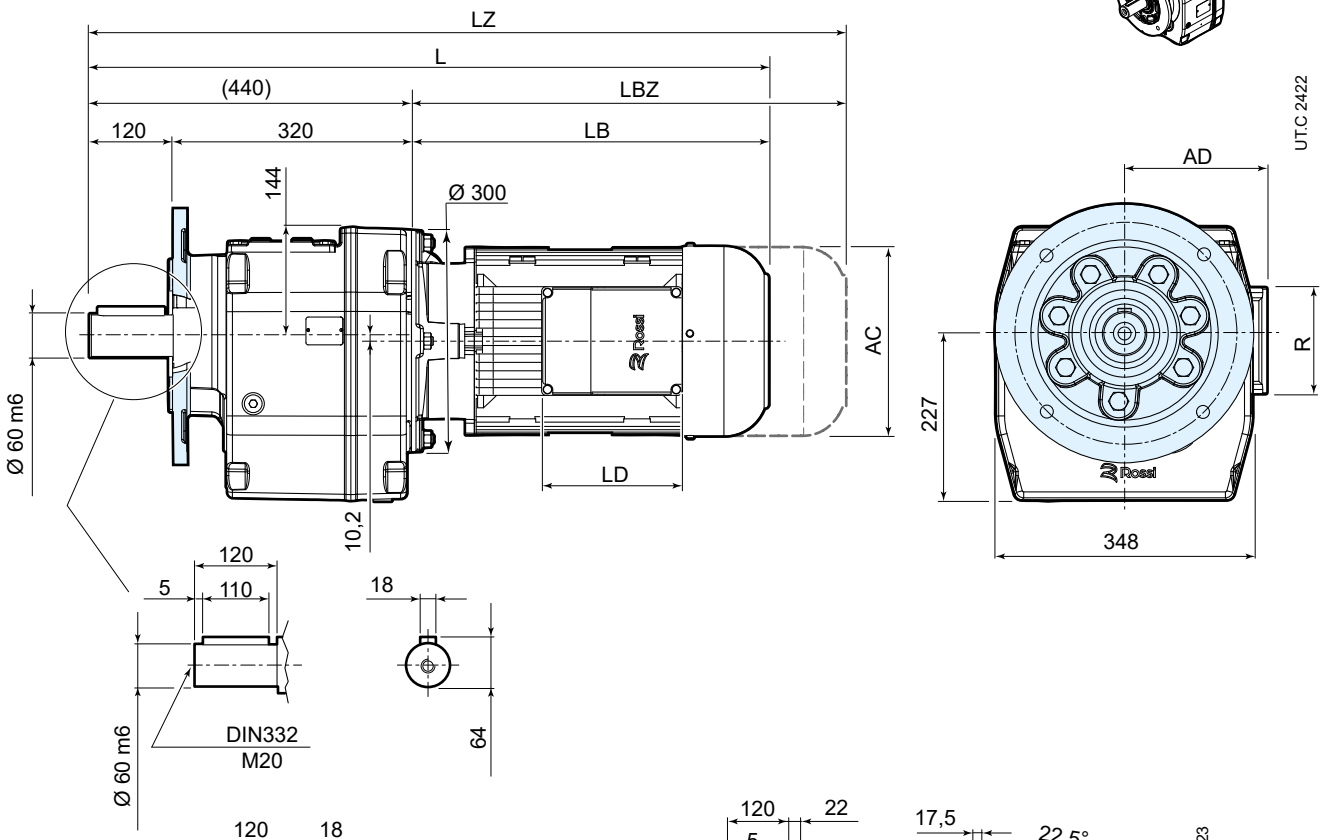

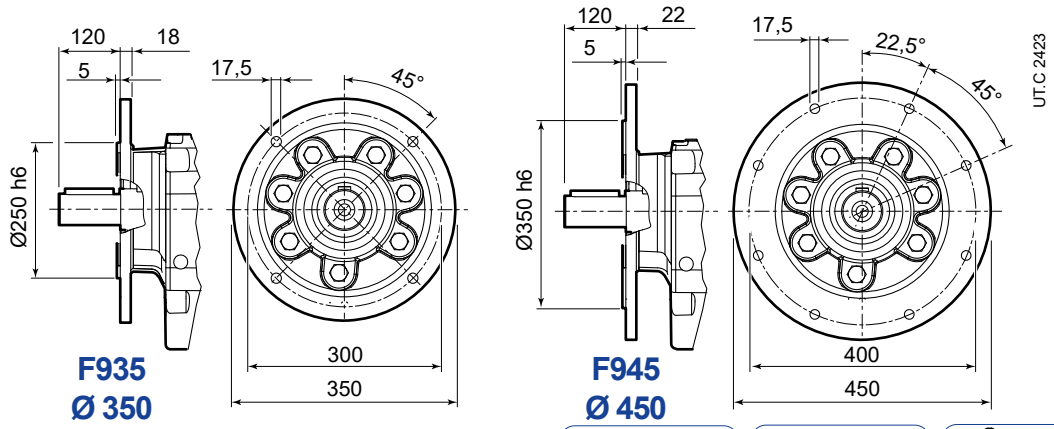

F935
Ø 350

F945
Ø 450

97 83 278

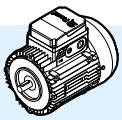

	80	90S [2]	90L	100	112	132S [3]	132M
AC	156	176	176	194	218	257	257
AD	121	141	141	151	163	194	194
LB	242	264	294	327	364	423	483
LBZ	311	343	373	422	463	531	591
L [1]	682	704	734	767	804	863	923
LZ [1]	751	783	813	862	903	971	1031
LD	103	136	136	136	136	190	190
R	86	106	106	106	106	148	148

[1] See also pages 90, 91
[2] For motors HB3-HB3Z 90S 2, HB3-HB3Z 90S 4, HB3-HB3Z 90S 6 dimensions as motor size 90L
[3] For motors HB3-HB3Z 132 SB 2, HB3-HB3Z 132SC 2, HB3-HB3Z 132S 4 dimensions as motor size 132M

11

Bevel helical Selection tables - iO

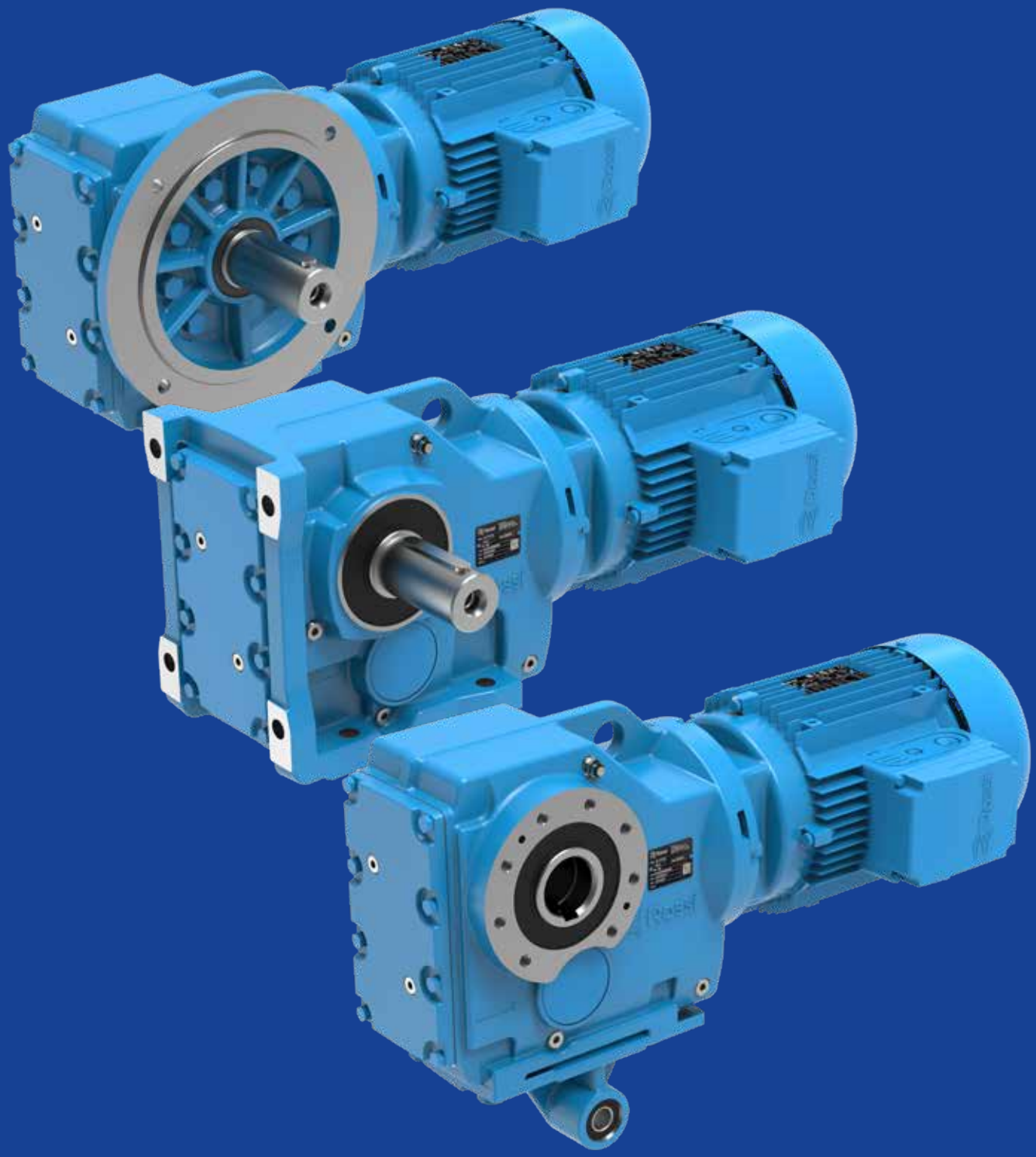

Section contents

11.1	Possible geometrical combinations	164
11.1.1	General	164
11.1.2	Key	164
11.2	Geometrical coupling tables	165
11.3	Selection tables [kW]	172

11.1

Possible geometrical combinations

11.1.1 General

The tables in the following pages show the geometrical coupling possibilities with HB 4 poles motors, according to train of gears (2 or 3 stages) and transmission ratio.
Also the low speed shaft rotation speed n_2, calculated according to a nominal input speed equal to n_1 = 1400 min^{-1}, are shown.
The values of the nominal torque at the low speed shaft M_{N2} and of the permissible radial load F_{r2} acting on the center line are also referred to this speed.

At the time of selection, it is necessary to evaluate the actual operating conditions in relation to the actual power of the applied motor as indicated in ch. 6.

11.1.2 Key

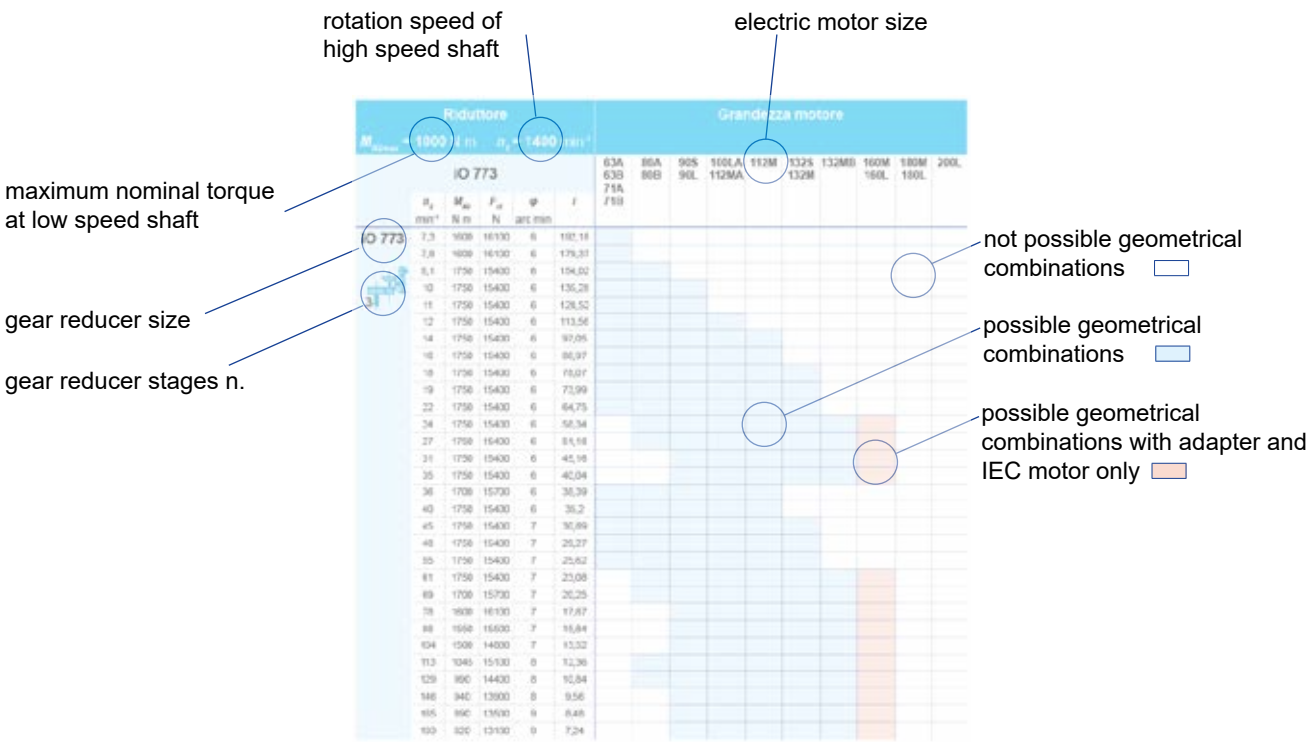

where

- n_2 low speed shaft rotation speed
- M_{N2} nominal torque at low speed shaft
- F_{r2} permissible radial load acting on center line of low speed shaft
  (at speed n_2 and with torque M_{N2} indicated in the table - valid only for foot mounted gearmotor design)
- φ reduced backlash, referred to low speed shaft
  (tolerance ± 2 arc min - if value is not specified, the reduced backlash option is not available)
- i transmission ratio

Gear reducer M_{N2max} = 224 N m n_1 = 1400 min^{-1}						Motor size									
iO 373						63A 63B 71A 71B	80A 80B	90S 90L	100LA 112MA	112M	132S 132M	132MB	160M 160L	180M 180L	200L
	n_2 min^{-1}	M_{N2} N m	F_{r2} N	φ arc min	i										
iO 373	13	224	5640	7	106,38										
	14	224	5640	7	97,81										
	17	224	5640	7	83,69										
	19	224	5520	7	72,54										
3	21	224	5360	7	67,8										
	24	224	5020	7	58,6										
	28	224	4660	7	49,79										
	31	224	4420	7	44,46										
	37	224	4100	7	37,97										
	39	224	3970	8	35,57										
	47	224	3650	8	29,96										
	49	224	3580	9	28,83										
	56	224	3330	9	24,99										
	60	315	3260	9	23,36										
	69	205	3110	9	20,19										
	82	200	2900	9	17,15										
	91	195	2780	9	15,31										
	107	185	2650	9	13,08										
	115	180	2600	12	12,14										
	133	180	2410	13	10,49										
	157	180	2200	13	8,91										
	176	175	2110	13	7,96										
	206	170	1980	13	6,8										
	220	160	1950	13	6,37										
	261	150	1810	14	5,36										

Gear reducer M_{N2max} = 450 N m n_1 = 1400 min^{-1}						Motor size									
iO 473						63A 63B 71A 71B	80A 80B	90S 90L	100LA 112MA	112M	132S 132M	132MB	160M 160L	180M 180L	200L
	n_2 min^{-1}	M_{N2} N m	F_{r2} N	φ arc min	i										
iO 473	11	450	5920	7	131,87 (1)										
	12	450	5920	7	121,48 (1)										
	13	450	5920	7	104,37										
3	15	450	5920	7	90,86										
	16	450	5920	7	85,12 (1)										
	19	450	5920	7	75,2 (1)										
	20	450	5920	7	69,84										
	22	450	5920	7	63,3 (1)										
	25	450	5920	7	56,83										
	29	450	5920	7	48,95 (1)										
	30	450	5920	7	46,03 (1)										
	35	450	5920	7	39,61										
	40	450	5920	7	35,39										
	45	450	5700	8	31,3										
	48	450	5520	8	29,32										
	54	450	5170	8	25,91										
	58	450	4970	8	24,06										
	64	450	4710	8	21,81										
	72	450	4440	8	19,58										
	83	425	4220	8	16,86										
	88	425	4080	8	15,86										
	103	400	3890	8	13,65										
	115	385	3720	9	12,19										
	119	280	4060	11	11,77										
	133	280	3830	11	10,56										
	154	280	3540	11	9,1										
	164	270	3500	11	8,56										
	190	250	3380	11	7,36										
	213	240	3270	12	6,58										
	241	230	3140	12	5,81										

(1) Finite transmission ratio *i*

Gear reducer M_{N2max} = 670 N m n_1 = 1400 min^{-1}						Motor size									
iO 573						63A 63B 71A 71B	80A 80B	90S 90L	100LA 112MA	112M	132S 132M	132MB	160M 160L	180M 180L	200L
	n_2 min^{-1}	M_{N2} N m	F_{r2} N	φ arc min	i										
iO 573 3	9,6	670	7630	6	145,14 (1)										
	11	670	7630	6	123,85										
	13	670	7630	6	108,29										
	14	670	7630	6	102,88 (1)										
	16	670	7630	6	90,26 (1)										
	18	670	7630	6	76,56 (1)										
	20	670	7630	6	69,12										
	23	670	7630	6	60,81 (1)										
	24	670	7630	6	57,42 (1)										
	29	670	7630	6	48,89										
	32	670	7630	7	44,43										
	36	670	7630	7	38,49										
	39	670	7630	7	35,7										
	46	670	7300	7	30,28										
	51	670	6930	7	27,34										
	58	670	6480	7	24,05										
	62	670	6280	7	22,71										
	72	650	5910	7	19,34										
	80	615	5740	8	17,57										
	92	600	5430	8	15,22										
	106	580	5190	8	13,25										
	117	460	5150	10	11,92										
	124	460	4990	10	11,26										
	146	450	4650	10	9,59										
	161	430	4520	10	8,71										
	185	400	4360	11	7,55										
	213	375	4180	11	6,57										

(1) Finite transmission ratio *i*

Gear reducer						Motor size									
M_{N2max} = 925 N m n_1 = 1400 min^{-1}															
iO 673						63A 63B 71A 71B	80A 80B	90S 90L	100LA 112MA	112M	132S 132M	132MB	160M 160L	180M 180L	200L
	n_2 min^{-1}	M_{N2} N m	F_{r2} N	φ arc min	i										
iO 673	9,7	925	10300	7	144,79 (1)										
	11	915	10300	7	123,54										
	13	910	10300	7	108,03										
	14	910	10300	7	102,62										
3	16	905	10300	7	90,04										
	18	900	10300	7	76,37										
	20	900	10300	7	68,95										
	23	895	10300	7	60,66										
	24	895	10300	7	57,28										
	29	890	10300	7	48,77										
	32	885	10300	7	44,32										
	36	880	10500	7	38,39										
	39	880	10300	8	35,62										
	46	875	10300	8	30,22										
	51	875	10300	8	27,28										
	58	870	10500	8	24										
	62	870	10700	8	22,66										
	73	850	10800	8	19,3										
	80	820	11000	8	17,54										
	92	765	11300	8	15,19										
	106	670	11500	8	13,22										
	112	530	12300	9	12,48										
	132	500	11800	9	10,63										
	145	480	11500	10	9,66										
	167	440	11100	10	8,37										
	192	420	10700	10	7,28										

Gear reducer M_{N2max} = 1750 N m n_1 = 1400 min^{-1}						Motor size									
iO 773	n_2 min^{-1}	M_{N2} N m	F_{r2} N	φ arc min	i	63A 63B 71A 71B	80A 80B	90S 90L	100LA 112MA	112M	132S 132M	132MB	160M 160L	180M 180L	200L
iO 773	7,3	1600	16100	6	192,18										
	7,8	1600	16100	6	179,37										
	9,1	1750	15400	6	154,02										
3	10	1750	15400	6	135,28										
	11	1750	15400	6	128,52										
	12	1750	15400	6	113,56										
	14	1750	15400	6	97,05										
	16	1750	15400	6	88,97										
	18	1750	15400	6	78,07										
	19	1750	15400	6	73,99										
	22	1750	15400	6	64,75										
	24	1750	15400	6	58,34										
	27	1750	15400	6	51,18										
	31	1750	15400	6	45,16										
	35	1750	15400	6	40,04										
	36	1700	15700	6	38,39										
	40	1750	15400	6	35,2										
	45	1750	15400	7	30,89										
	48	1750	15400	7	29,27										
	55	1750	15400	7	25,62										
	61	1750	15400	7	23,08										
	69	1700	15700	7	20,25										
	78	1600	16100	7	17,87										
	88	1550	15500	7	15,84										
	104	1500	14800	7	13,52										
	113	1045	15100	8	12,36										
	129	990	14400	8	10,84										
	146	940	13900	8	9,56										
	165	890	13500	9	8,48										
	193	820	13100	9	7,24										

Gear reducer M_{N2max} = 3000 N m n_1 = 1400 min^{-1}						Motor size									
iO 873	n_2 min^{-1}	M_{N2} N m	F_{r2} N	φ arc min	i	63A 63B 71A 71B	80A 80B	90S 90L	100LA 112MA	112M	132S 132M	132MB	160M 160L	180M 180L	200L
iO 873 3	7,1	3000	27300	6	197,37										
	8	3000	27300	6	174,19										
	8,5	3000	27300	6	164,34 (1)										
	9,5	3000	27300	6	147,32 (1)										
	11	3000	27300	6	126,91 (1)										
	12	3000	27300	6	115,82										
	14	3000	27300	6	102,71 (1)										
	16	3000	27300	6	86,34										
	18	3000	27300	6	79,34										
	20	3000	27300	6	70,46										
	22	3000	26200	6	63 (1)										
	25	3000	25000	6	56,64										
	28	3000	23500	6	49,16										
	32	2900	22800	6	44,02										
	38	2800	21400	6	36,52 (1)										
	45	3000	19200	7	31,39										
	50	2900	18500	7	27,88										
	56	2800	18000	7	24,92										
	62	2570	17900	7	22,41										
	72	2570	16800	7	19,45										
	80	2430	16300	7	17,42										
	88	1970	16000	7	16										
	97	2360	15300	7	14,45										
	111	2240	14800	7	12,56										
	125	1700	14900	7	11,17										
	140	1700	14200	7	10										
	169	1550	13500	7	8,29										
	194	1450	13200	8	7,21										

(1) Finite transmission ratio *i*

Gear reducer M_{N2max} = 4870 N m n_1 = 1400 min^{-1}						Motor size									
iO 973						63A 63B 71A 71B	80A 80B	90S 90L	100LA 112MA	112M	132S 132M	132MB	160M 160L	180M 180L	200L
	n_2 min^{-1}	M_{N2} N m	F_{r2} N	φ arc min	i										
iO 973 3	8	4870	40000	7	176,05 (1)										
	9,1	4870	40000	7	153,21 (1)										
	10	4870	40000	7	140,28										
	11	4870	40000	7	123,93 (1)										
	13	4870	40000	7	105,13										
	14	4870	40000	7	96,8										
	16	4870	38800	7	86,52										
	18	4870	37100	7	77,89 (1)										
	20	4870	35600	7	70,54										
	22	4870	33800	7	62,55										
	25	4870	32300	7	56,55										
	29	4870	30000	7	47,93 (1)										
	33	4870	28300	7	41,87										
	37	4870	27100	8	38,3										
	41	4870	25700	8	34,23										
	45	4870	24500	8	30,82										
	50	4870	23300	8	27,91										
	57	4870	22000	8	24,75										
	63	4870	20900	8	22,37										
	74	4870	19100	8	18,96										
	85	4870	17800	8	16,56										
	101	4580	16100	8	13,85										
	117	4270	16200	8	11,99										
	134	3130	16400	10	10,41										
	161	2880	15800	10	8,71										

(1) Finite transmission ratio *i*

11.3

Selection tables [kW]

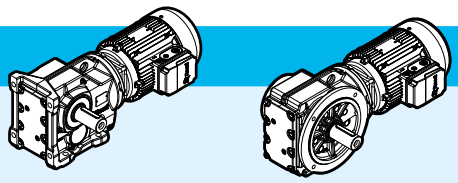

n_2 min^{-1}	M_2 N m	i	F_{r2} N	fs			kg foot HB	kg foot HBZ	kg flange HB	kg flange HBZ	p.
P_1 = 0,12 kW											
6,3	182	144,79 (1)	13000	5,1	**iO 673 – HB2 63 B 6 B16B**	3	34	36	40	41	207
6,3	183	145,14 (1)	9660	3,7	**iO 573 – HB2 63 B 6 B16B**	3	30	32	37	38	204
7,3	156	123,85	9740	4,3							
8,4	136	108,29	9800	4,9							
8,8	130	102,88 (1)	9820	5,2							
10	114	90,26 (1)	9870	5,9							
12	96	76,56 (1)	9920	6,9							
9,4	121	145,14 (1)	9870	5,5	**iO 573 – HB2 63 A 4 B16B**	3	29	31	36	38	204
11	104	123,85	9910	6,5							
13	91	108,29	9950	7,4							
13	86	102,88 (1)	9960	7,8							
15	76	90,26 (1)	9990	8,9							
6,9	166	131,87 (1)	7900	2,7	**iO 473 – HB2 63 B 6 B16B**	3	23	25	25	27	201
7,5	153	121,48 (1)	7960	2,9							
8,7	131	104,37	8050	3,4							
10	110	131,87 (1)	8140	4,1	**iO 473 – HB2 63 A 4 B16B**	3	22	24	25	27	201
11	102	121,48 (1)	8160	4,4							
8,6	134	106,38	5750	1,65	**iO 373 – HB2 63 B 6 B12B**	3	19	20	21	22	198
9,3	123	97,81	5860	1,8							
11	105	83,69	6030	2,1							
13	91	72,54	6160	2,5							
13	89	106,38	6220	2,5	**iO 373 – HB2 63 A 4 B12B**	3	18	20	20	22	198
14	82	97,81	6290	2,7							
16	70	83,69	6400	3,2							
19	61	72,54	6480	3,7							
20	57	67,8	6520	3,9							
P_1 = 0,18 kW											
6,3	274	144,79 (1)	13000	3,4	**iO 673 – HB2 71 A 6 B16B**	3	36	38	41	44	207
7,4	233	123,54	13000	4							
8,4	204	108,03	13000	4,5							
8,9	194	102,62	13000	4,8							
9,4	183	144,79 (1)	13000	5,1	**iO 673 – HB2 63 B 4 B16B**	3	34	36	40	41	207
11	156	123,54	13000	5,9							
13	137	108,03	13000	6,7							

(1) Finite transmission ratio *i*

P_1 = 0,18 kW

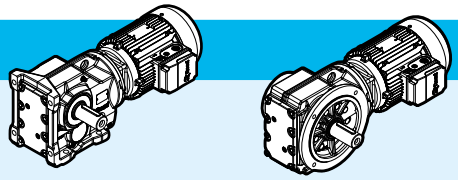

n_2 min^{-1}	M_2 N m	i	F_{r2} N	fs			kg foot HB	kg foot HBZ	kg flange HB	kg flange HBZ	p.
6,3	274	145,14 (1)	9380	2,4	**iO 573 – HB2 71 A 6 B16B**	3	31	34	38	41	204
7,3	234	123,85	9520	2,9							
8,4	205	108,29	9620	3,3							
8,8	194	102,88 (1)	9650	3,4							
10	171	90,26 (1)	9720	3,9							
9,4	183	145,14 (1)	9690	3,7	**iO 573 – HB2 63 B 4 B16B**	3	30	32	37	38	204
11	157	123,85	9770	4,3							
13	137	108,29	9820	4,9							
13	130	102,88 (1)	9840	5,2							
15	114	90,26 (1)	9890	5,9							
18	97	76,56 (1)	9930	6,9							
6,9	249	131,87 (1)	7480	1,8	**iO 473 – HB2 71 A 6 B16B**	3	24	27	27	30	201
7,5	229	121,48 (1)	7600	1,95							
8,7	197	104,37	7790	2,3							
10	172	90,86	7920	2,6							
11	161	85,12 (1)	7960	2,8							
10	167	131,87 (1)	7940	2,7	**iO 473 – HB2 63 B 4 B16B**	3	23	25	25	27	201
11	154	121,48 (1)	8000	2,9							
13	132	104,37	8080	3,4							
15	115	90,86	8130	3,9							
16	108	85,12 (1)	8150	4,2							
8,6	201	106,38	5210	1,1	**iO 373 – HB2 71 A 6 B12B**	3	20	23	22	25	198
9,3	185	97,81	5360	1,2							
11	158	83,69	5600	1,4							
13	137	72,54	5790	1,65							
13	134	106,38	5820	1,65	**iO 373 – HB2 63 B 4 B12B**	3	19	20	21	22	198
14	124	97,81	5920	1,8							
16	106	83,69	6080	2,1							
19	92	72,54	6200	2,4							
20	86	67,8	6260	2,6							
23	74	58,6	6210	3							
27	63	49,79	5950	3,6							
31	56	44,46	5770	4							
36	48	37,97	5520	4,7							

P_1 = 0,25 kW

4,7	510	192,18	19700	3,1	**iO 773 – HB2 71 B 6 B20B**	3	55	58	63	66	210
5,0	476	179,37	19800	3,4							
5,8	409	154,02	19900	4,3							
6,7	359	135,28	19900	4,9							
6,2	384	144,79 (1)	12900	2,4	**iO 673 – HB2 71 B 6 B16B**	3	37	39	42	45	207
7,3	328	123,54	13000	2,8							
8,3	287	108,03	13000	3,2							
8,8	272	102,62	13000	3,4							

(1) Finite transmission ratio *i*

P_1 = 0,25 kW

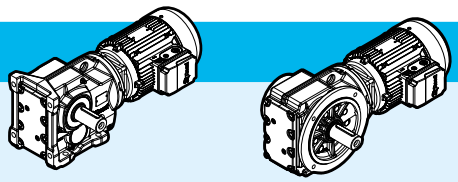

n_2 min^{-1}	M_2 N m	i	F_{r2} N	fs			kg foot HB	kg foot HBZ	kg flange HB	kg flange HBZ	p.
9,7	247	144,79 (1)	13000	3,7	**iO 673 – HB2 71 A 4 B16B**	3	35	38	41	43	207
11	211	123,54	13000	4,4							
13	184	108,03	13000	4,9							
14	175	102,62	13000	5,2							
6,2	385	145,14 (1)	8970	1,75	**iO 573 – HB2 71 B 6 B16B**	3	32	35	39	41	204
7,3	329	123,85	9200	2							
8,3	287	108,29	9350	2,3							
8,7	273	102,88 (1)	9400	2,5							
10,0	239	90,26 (1)	9520	2,8							
12	203	76,56 (1)	9630	3,3							
9,6	248	145,14 (1)	9480	2,7	**iO 573 – HB2 71 A 4 B16B**	3	31	34	38	40	204
11	211	123,85	9600	3,2							
13	185	108,29	9680	3,6							
14	175	102,88 (1)	9710	3,8							
16	154	90,26 (1)	9770	4,4							
18	131	76,56 (1)	9840	5,1							
6,8	350	131,87 (1)	6620	1,3	**iO 473 – HB2 71 B 6 B16B**	3	25	28	28	30	201
7,4	322	121,48 (1)	6900	1,4							
8,6	277	104,37	7290	1,65							
9,9	241	90,86	7550	1,85							
11	226	85,12 (1)	7640	2							
11	225	131,87 (1)	7630	2	**iO 473 – HB2 71 A 4 B16B**	3	24	27	27	29	201
12	207	121,48 (1)	7740	2,2							
13	178	104,37	7890	2,5							
15	155	90,86	7990	2,9							
16	145	85,12 (1)	8020	3,1							
11	222	83,69	5040	1	**iO 373 – HB2 71 B 6 B12B**	3	21	24	23	26	198
12	192	72,54	5310	1,15							
13	180	67,8	5420	1,25							
15	155	58,6	5640	1,45							
18	132	49,79	5850	1,7							
13	181	106,38	5380	1,25	**iO 373 – HB2 71 A 4 B12B**	3	20	22	22	24	198
14	167	97,81	5520	1,35							
17	143	83,69	5740	1,55							
19	124	72,54	5910	1,8							
21	116	67,8	5980	1,95							
24	100	58,6	5920	2,2							
28	85	49,79	5700	2,6							
31	76	44,46	5540	3							
37	65	37,97	5320	3,5							
39	61	35,57	5230	3,7							
47	51	29,96	5000	4,4							
49	49	28,83	4940	4,6							

(1) Finite transmission ratio *i*

P_1 = 0,37 kW

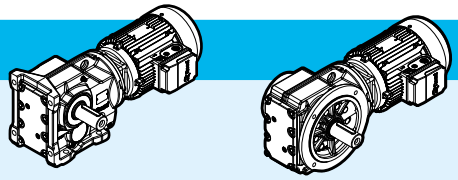

n_2 min^{-1}	M_2 N m	i	F_{r2} N	fs			kg foot HB	kg foot HBZ	kg flange HB	kg flange HBZ	p.
4,7	750	197,37	28900	4	**iO 873 – HB2 80 A 6 B25C**	3	103	107	108	112	213
5,3	662	174,19	28900	4,5							
6,0	585	154,02	19500	3	**iO 773 – HB2 80 A 6 B20C**	3	56	60	64	68	210
6,9	514	135,28	19700	3,4							
7,2	488	128,52	19700	3,6							
8,2	431	113,56	19800	4,1							
7,3	485	192,18	19700	3,3	**iO 773 – HB2 71 B 4 B20B**	3	55	58	63	65	210
7,8	453	179,37	19800	3,5							
9,1	389	154,02	19900	4,5							
7,5	469	123,54	12600	1,95	**iO 673 – HB2 80 A 6 B16C**	3	38	42	43	47	207
8,6	410	108,03	12800	2,3							
9,1	390	102,62	12900	2,4							
10	342	90,04	13000	2,7							
9,7	365	144,79 (1)	12900	2,5	**iO 673 – HB2 71 B 4 B16B**	3	36	39	42	44	207
11	312	123,54	13000	2,9							
13	273	108,03	13000	3,3							
16	227	90,04	13000	4							
18	193	76,37	13000	4,7							
7,5	471	123,85	8570	1,4	**iO 573 – HB2 80 A 6 B16C**	3	33	37	40	44	204
8,6	411	108,29	8840	1,65							
9,0	391	102,88 (1)	8930	1,7							
10	343	90,26 (1)	9130	1,95							
12	291	76,56 (1)	9320	2,3							
13	263	69,12	9430	2,6							
9,6	366	145,14 (1)	9040	1,85	**iO 573 – HB2 71 B 4 B16B**	3	32	35	39	41	204
11	313	123,85	9250	2,1							
13	273	108,29	9390	2,5							
14	260	102,88 (1)	9440	2,6							
16	228	90,26 (1)	9550	2,9							
18	193	76,56 (1)	9660	3,5							
20	174	69,12	9720	3,8							
8,9	397	104,37	6000	1,15	**iO 473 – HB2 80 A 6 B16C**	3	26	30	29	33	201
10	345	90,86	6630	1,3							
11	323	85,12 (1)	6860	1,4							
12	286	75,2 (1)	7200	1,55							
11	333	131,87 (1)	6780	1,35	**iO 473 – HB2 71 B 4 B16B**	3	25	28	27	30	201
12	307	121,48 (1)	7030	1,45							
13	263	104,37	7380	1,7							
15	229	90,86	7610	1,95							
16	215	85,12 (1)	7700	2,1							
19	190	75,2 (1)	7840	2,4							
20	176	69,84	7900	2,6							
22	160	63,3 (1)	7970	2,8							

(1) Finite transmission ratio *i*

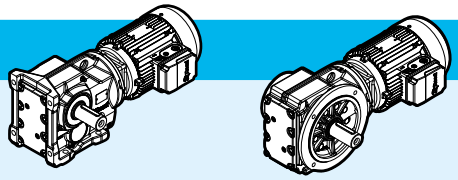

P_1 = 0,37 kW

n_2 min^{-1}	M_2 N m	i	F_{r2} N	fs			kg foot HB	kg foot HBZ	kg flange HB	kg flange HBZ	p.
14	247	97,81	3550	0,9	**iO 373 – HB2 71 B 4 B12B**	3	21	23	23	25	198
17	211	83,69	5130	1,05							
19	183	72,54	5380	1,2							
21	171	67,8	5490	1,3							
24	148	58,6	5480	1,5							
28	126	49,79	5320	1,8							
31	112	44,46	5200	2							
37	96	37,97	5030	2,3							
39	90	35,57	4960	2,5							
47	76	29,96	4770	3							
49	73	28,83	4720	3,1							
56	63	24,99	4560	3,6							
60	59	23,36	4480	3,7							
69	51	20,19	4320	4							
82	43	17,15	4130	4,6							

P_1 = 0,55 kW

4,7	1127	197,37	28700	2,7	**iO 873 – HB2 80 B 6 B25C**	3	104	108	109	113	213
5,3	994	174,19	28800	3							
5,6	938	164,34 (1)	28800	3,2							
6,2	841	147,32 (1)	28900	3,6							
6,0	879	154,02	18900	2	**iO 773 – HB2 80 B 6 B20C**	3	58	62	65	69	210
6,8	772	135,28	19200	2,3							
7,2	734	128,52	19300	2,4							
8,1	648	113,56	19500	2,7							
9,1	576	154,02	19600	3	**iO 773 – HB2 80 A 4 B20C**	3	56	60	63	67	210
10	506	135,28	19700	3,5							
11	480	128,52	19700	3,6							
12	425	113,56	19800	4,1							
14	363	97,05	19900	4,8							
7,4	705	123,54	11500	1,3	**iO 673 – HB2 80 B 6 B16C**	3	39	43	45	49	207
8,5	617	108,03	12000	1,5							
9,0	586	102,62	12100	1,6							
10	514	90,04	12500	1,8							
12	436	76,37	12800	2,1							
11	462	123,54	12600	2	**iO 673 – HB2 80 A 4 B16C**	3	37	41	43	47	207
13	404	108,03	12800	2,3							
16	337	90,04	13000	2,7							
18	286	76,37	13000	3,2							

(1) Finite transmission ratio *i*

P_1 = 0,55 kW

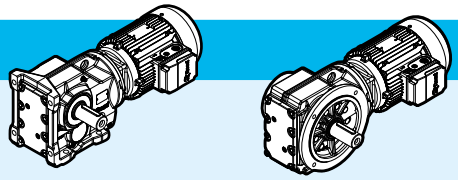

n_2 min^{-1}	M_2 N m	i	F_{r2} N	fs			kg foot HB	kg foot HBZ	kg flange HB	kg flange HBZ	p.
8,5	618	108,29	7720	1,1	**iO 573 – HB2 80 B 6 B16C**	3	35	39	42	45	204
8,9	587	102,88 (1)	7960	1,15							
10	515	90,26 (1)	8460	1,3							
12	437	76,56 (1)	8810	1,55							
13	395	69,12	8980	1,7							
15	347	60,81 (1)	9170	1,95							
16	328	57,42 (1)	9240	2							
11	463	123,85	8640	1,45	**iO 573 – HB2 80 A 4 B16C**	3	33	37	40	43	204
13	405	108,29	8900	1,65							
14	385	102,88 (1)	8980	1,75							
16	337	90,26 (1)	9170	2							
18	286	76,56 (1)	9360	2,3							
20	258	69,12	9460	2,6							
23	227	60,81 (1)	9560	2,9							
24	215	57,42 (1)	9600	3,1							
13	390	104,37	6170	1,15	**iO 473 – HB2 80 A 4 B16C**	3	26	30	28	32	201
15	340	90,86	6750	1,3							
17	318	85,12 (1)	6950	1,4							
19	281	75,2 (1)	7270	1,6							
20	261	69,84	7420	1,7							
22	237	63,3 (1)	7580	1,9							
25	212	56,83	7730	2,1							
29	183	48,95 (1)	7880	2,5							
31	172	46,03 (1)	7930	2,6							
24	219	58,6	4830	1	**iO 373 – HB2 80 A 4 B12C**	3	22	26	24	28	198
28	186	49,79	4760	1,2							
32	166	44,46	4700	1,35							
37	142	37,97	4600	1,6							
40	133	35,57	4560	1,7							
47	112	29,96	4420	2							
49	108	28,83	4390	2,1							
56	93	24,99	4270	2,4							
60	87	23,36	4210	2,5							
70	75	20,19	4080	2,7							
82	64	17,15	3930	3,1							
92	57	15,31	3830	3,4							
107	49	13,08	3680	3,8							
116	45	12,14	3610	4							
134	39	10,49	3470	4,6							

(1) Finite transmission ratio *i*

P_1 = 0,75 kW

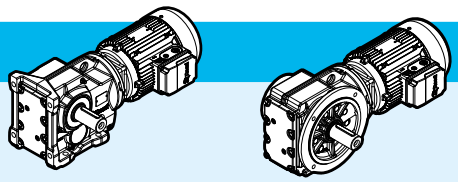

n_2 min^{-1}	M_2 N m	i	F_{r2} N	fs			kg foot HB	kg foot HBZ	kg flange HB	kg flange HBZ	p.
5,3	1342	174,19	28600	2,2	**iO 873 – HB3 90 S 6 B25D**	3	110	114	115	119	213
5,7	1266	164,34 (1)	28700	2,4							
6,3	1135	147,32 (1)	28700	2,6							
7,3	977	126,91 (1)	28800	3,1							
7,1	1003	197,37	28800	3	**iO 873 – HB3 80 B 4 B25C**	3	107	111	112	116	213
8,1	885	174,19	28800	3,4							
8,6	835	164,34 (1)	28900	3,6							
9,6	748	147,32 (1)	28900	4							
6,9	1042	135,28	18300	1,7	**iO 773 – HB3 90 S 6 B20D**	3	64	68	71	75	210
7,2	990	128,52	18400	1,75							
8,2	875	113,56	18800	2							
9,6	747	97,05	19200	2,3							
10	685	88,97	19300	2,6							
9,2	782	154,02	19100	2,2	**iO 773 – HB3 80 B 4 B20C**	3	60	64	68	72	210
10	687	135,28	19300	2,5							
11	653	128,52	19400	2,7							
12	577	113,56	19600	3							
15	493	97,05	19700	3,5							
11	628	123,54	11800	1,45	**iO 673 – HB3 80 B 4 B16C**	3	42	46	47	51	207
13	549	108,03	12200	1,65							
16	457	90,04	12600	2							
18	388	76,37	12900	2,3							
20	350	68,95	13000	2,6							
23	308	60,66	13000	2,9							
25	291	57,28	13000	3,1							
11	629	123,85	7500	1,05	**iO 573 – HB3 80 B 4 B16C**	3	37	41	44	48	204
13	550	108,29	8120	1,2							
14	523	102,88 (1)	8330	1,3							
16	459	90,26 (1)	8660	1,45							
18	389	76,56 (1)	8960	1,7							
20	351	69,12	9120	1,9							
23	309	60,81 (1)	9280	2,2							
25	292	57,42 (1)	9340	2,3							
29	248	48,89	9490	2,7							
32	226	44,43	9560	3							
19	382	75,2 (1)	6270	1,2	**iO 473 – HB3 80 B 4 B16C**	3	30	34	33	37	201
20	355	69,84	6590	1,25							
22	322	63,3 (1)	6920	1,4							
25	289	56,83	7210	1,55							
29	249	48,95 (1)	7500	1,8							
31	234	46,03 (1)	7600	1,9							
36	201	39,61	7790	2,2							
40	180	35,39	7690	2,5							
45	159	31,3	7480	2,8							

(1) Finite transmission ratio *i*

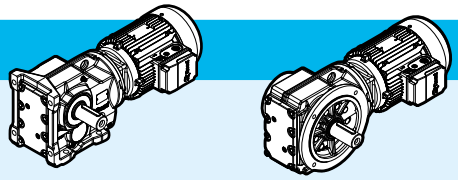

P_1 = 0,75 kW

n_2 min^{-1}	M_2 N m	i	F_{r2} N	fs			kg foot HB	kg foot HBZ	kg flange HB	kg flange HBZ	p.
32	226	44,46	4170	1	**iO 373 – HB3 80 B 4 B12C**	3	26	30	28	32	198
37	193	37,97	4140	1,15							
40	181	35,57	4130	1,25							
47	152	29,96	4060	1,45							
49	146	28,83	4040	1,55							
56	127	24,99	3970	1,75							
60	119	23,36	3930	1,85							
70	103	20,19	3840	2							
82	87	17,15	3720	2,3							
92	78	15,31	3640	2,5							
108	66	13,08	3520	2,8							
116	62	12,14	3460	2,9							
134	53	10,49	3340	3,4							
158	45	8,91	3210	4							
177	40	7,96	3120	4,3							

P_1 = 1,1 kW

5,3	1989	176,05 (1)	40000	2,4	**iO 973 – HB3 90 L 6 B30D**	3	174	180	190	197	216
6,1	1731	153,21 (1)	40000	2,8							
6,6	1585	140,28	40000	3,1							
7,5	1400	123,93 (1)	40000	3,5							
8,1	1302	176,05 (1)	40000	3,7	**iO 973 – HB3 90 S 4 B30D**	3	173	177	189	193	216
9,3	1133	153,21 (1)	40000	4,3							
10	1038	140,28	40000	4,7							
6,3	1664	147,32 (1)	28400	1,8	**iO 873 – HB3 90 L 6 B25D**	3	114	120	119	126	213
7,3	1434	126,91 (1)	28500	2,1							
8,2	1289	174,19	28600	2,3	**iO 873 – HB3 90 S 4 B25D**	3	113	117	118	122	213
8,6	1216	164,34 (1)	28700	2,5							
9,6	1090	147,32 (1)	28800	2,8							
11	939	126,91 (1)	28800	3,2							
12	857	115,82	28900	3,5							
8,2	1283	113,56	17200	1,35	**iO 773 – HB3 90 L 6 B20D**	3	68	74	75	82	210
9,6	1096	97,05	18000	1,6							
10	1001	135,28	18400	1,75	**iO 773 – HB3 90 S 4 B20D**	3	67	71	74	78	210
11	951	128,52	18600	1,85							
13	840	113,56	18900	2,1							
15	718	97,05	19300	2,4							
16	658	88,97	19400	2,7							
18	578	78,07	19600	3							
19	547	73,99	19600	3,2							

(1) Finite transmission ratio *i*

P_1 = 1,1 kW

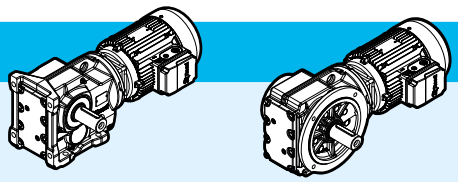

n_2 min^{-1}	M_2 N m	i	F_{r2} N	fs			kg foot HB	kg foot HBZ	kg flange HB	kg flange HBZ	p.
13	799	108,03	10700	1,15	**iO 673 – HB3 90 S 4 B16D**	3	48	52	54	58	207
14	759	102,62	11000	1,2							
16	666	90,04	11600	1,35							
19	565	76,37	12200	1,6							
21	510	68,95	12400	1,75							
23	449	60,66	12700	2							
25	424	57,28	12800	2,1							
29	361	48,77	13000	2,5							
32	328	44,32	13000	2,7							
37	284	38,39	13000	3,1							
16	668	90,26 (1)	6280	1	**iO 573 – HB3 90 S 4 B16D**	3	44	48	51	55	204
19	566	76,56 (1)	8010	1,2							
21	511	69,12	8420	1,3							
23	450	60,81 (1)	8710	1,5							
25	425	57,42 (1)	8820	1,6							
29	362	48,89	9080	1,85							
32	329	44,43	9210	2							
37	285	38,49	9370	2,4							
40	264	35,7	9440	2,5							
47	224	30,28	9570	3							
52	202	27,34	9430	3,3							
59	178	24,05	9130	3,8							
63	168	22,71	9000	4							
73	143	19,34	8640	4,5							
81	130	17,57	8420	4,7							
93	113	15,22	8100	5,3							
107	98	13,25	7790	5,9							
119	88	11,92	7490	5,2							
126	83	11,26	7370	5,5							
148	71	9,59	7040	6,3							
163	64	8,71	6850	6,7							
188	56	7,55	6570	7,2							
216	49	6,57	6310	7,8							
25	420	56,83	5430	1,05	**iO 473 – HB3 90 S 4 B16D**	3	37	41	39	43	201
29	362	48,95 (1)	6520	1,25							
31	341	46,03 (1)	6750	1,3							
36	293	39,61	7160	1,55							
40	262	35,39	7050	1,7							
45	232	31,3	6920	1,95							
48	217	29,32	6840	2,1							
55	192	25,91	6690	2,3							
59	178	24,06	6060	2,5							
65	161	21,81	6460	2,8							
73	145	19,58	6310	3,1							

(1) Finite transmission ratio *i*

P_1 = 1,1 kW

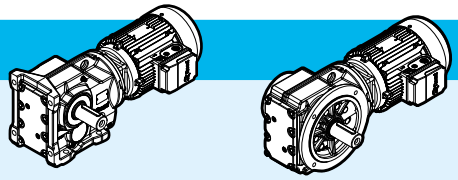

n_2 min^{-1}	M_2 N m	i	F_{r2} N	fs			kg foot HB	kg foot HBZ	kg flange HB	kg flange HBZ	p.
47	222	29,96	3430	1	**iO 373 – HB3 90 S 4 B12D**	3	32	36	34	38	198
57	185	24,99	3440	1,2							
61	173	23,36	3430	1,25							
70	149	20,19	3410	1,4							
83	127	17,15	3360	1,6							
93	113	15,31	3310	1,7							
109	97	13,08	3240	1,9							
117	90	12,14	3200	2							
135	78	10,49	3120	2,3							
159	66	8,91	3020	2,7							
178	59	7,96	2950	3							
209	50	6,8	2850	3,4							
223	47	6,37	2800	3,4							
265	40	5,36	2690	3,8							

P_1 = 1,5 kW

5,4	2655	176,05 (1)	40000	1,85	**iO 973 – HB3 100 LA 6 B30E**	3	180	186	197	203	216
6,2	2310	153,21 (1)	40000	2,1							
6,8	2115	140,28	40000	2,3							
7,7	1869	123,93 (1)	40000	2,6							
8,1	1764	176,05 (1)	40000	2,8	**iO 973 – HB3 90 L 4 B30D**	3	173	179	190	196	216
9,3	1535	153,21 (1)	40000	3,2							
10	1405	140,28	40000	3,5							
12	1241	123,93 (1)	40000	3,9							
6,4	2222	147,32 (1)	27900	1,35	**iO 873 – HB3 100 LA 6 B25E**	3	123	129	129	135	213
7,5	1914	126,91 (1)	28200	1,55							
8,2	1746	115,82	28300	1,7							
9,2	1549	102,71 (1)	28400	1,95							
8,2	1745	174,19	28300	1,7	**iO 873 – HB3 90 L 4 B25D**	3	113	119	119	125	213
8,7	1646	164,34 (1)	28400	1,8							
9,7	1476	147,32 (1)	28500	2							
11	1271	126,91 (1)	28600	2,4							
12	1160	115,82	28700	2,6							
14	1029	102,71 (1)	28800	2,9							
17	865	86,34	28900	3,5							
8,4	1712	113,56	14300	1	**iO 773 – HB3 100 LA 6 B20E**	3	77	83	85	91	210
9,8	1463	97,05	16100	1,2							
11	1342	88,97	16800	1,3							
12	1177	78,07	17600	1,5							

(1) Finite transmission ratio *i*

P_1 = 1,5 kW

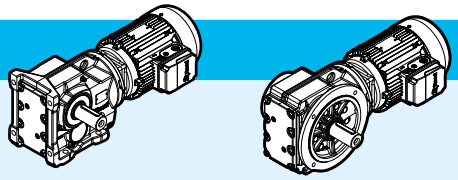

n_2 min^{-1}	M_2 N m	i	F_{r2} N	fs			kg foot HB	kg foot HBZ	kg flange HB	kg flange HBZ	p.
11	1355	135,28	16800	1,3	**iO 773 – HB3 90 L 4 B20D**	3	67	73	75	81	210
11	1287	128,52	17100	1,35							
13	1138	113,56	17800	1,55							
15	972	97,05	18500	1,8							
16	891	88,97	18800	1,95							
18	782	78,07	19100	2,2							
19	741	73,99	19200	2,4							
22	649	64,75	19400	2,7							
25	584	58,34	19600	3							
28	513	51,18	19700	3,4							
32	452	45,16	19800	3,9							
36	401	40,04	19900	4,4							
16	902	90,04	9710	1	**iO 673 – HB3 90 L 4 B16D**	3	49	55	54	60	207
19	765	76,37	10900	1,2							
21	691	68,95	11400	1,3							
24	608	60,66	11900	1,45							
25	574	57,28	12100	1,55							
29	489	48,77	12500	1,8							
32	444	44,32	12700	2							
37	385	38,39	12900	2,3							
40	357	35,62	13000	2,5							
47	303	30,22	13000	2,9							
52	273	27,28	13000	3,2							
60	240	24	13000	3,6							
24	609	60,81 (1)	7660	1,1	**iO 573 – HB3 90 L 4 B16D**	3	44	50	51	57	204
25	575	57,42 (1)	7930	1,15							
29	490	48,89	8520	1,35							
32	445	44,43	8720	1,5							
37	386	38,49	8980	1,75							
40	358	35,7	9090	1,85							
47	303	30,28	9130	2,2							
52	274	27,34	8950	2,4							
59	241	24,05	8710	2,8							
63	228	22,71	8600	2,9							
74	194	19,34	8300	3,4							

(1) Finite transmission ratio *i*

P_1 = 1,5 kW

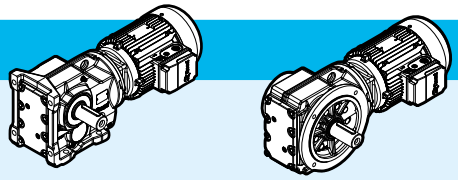

n_2 min^{-1}	M_2 N m	i	F_{r2} N	fs			kg foot HB	kg foot HBZ	kg flange HB	kg flange HBZ	p.
36	397	39,61	6080	1,15	**iO 473 – HB3 90 L 4 B16D**	3	37	43	40	46	201
40	355	35,39	6340	1,25							
46	314	31,3	6290	1,45							
49	294	29,32	6250	1,55							
55	260	25,91	6160	1,75							
59	241	24,06	6090	1,85							
66	218	21,81	6020	2,1							
73	196	19,58	5920	2,3							
85	169	16,86	5760	2,5							
90	159	15,86	5690	2,7							
105	137	13,65	5520	2,9							
117	122	12,19	5390	3,2							
122	118	11,77	5300	2,4							
61	234	23,36	2880	0,95	**iO 373 – HB3 90 L 4 B12D**	3	33	39	35	41	198
71	202	20,19	2920	1							
83	172	17,15	2950	1,15							
93	153	15,31	2940	1,25							
109	131	13,08	2920	1,4							
118	122	12,14	2910	1,5							
136	105	10,49	2870	1,7							
160	89	8,91	2810	2							
180	80	7,96	2760	2,2							
210	68	6,8	2680	2,5							
225	64	6,37	2650	2,5							
267	54	5,36	2560	2,8							

P_1 = 2,2 kW

6,3	3353	153,21 (1)	40000	1,45	**iO 973 – HB3 112 M 6 B30F**	3	188	197	205	214	216
6,8	3070	140,28	40000	1,6							
7,7	2712	123,93 (1)	40000	1,8							
9,1	2301	105,13	40000	2,1							
8,2	2569	176,05 (1)	40000	1,9	**iO 973 – HB3 100 LA 4 B30E**	3	180	186	197	203	216
9,4	2235	153,21 (1)	40000	2,2							
10	2047	140,28	40000	2,4							
12	1808	123,93 (1)	40000	2,7							
14	1534	105,13	40000	3,2							
15	1412	96,8	40000	3,4							
9,8	2150	147,32 (1)	27900	1,4	**iO 873 – HB3 100 LA 4 B25E**	3	123	129	129	135	213
11	1852	126,91 (1)	28200	1,6							
12	1690	115,82	28300	1,8							
14	1499	102,71 (1)	28500	2							
17	1260	86,34	28600	2,4							
18	1158	79,34	28700	2,6							
20	1028	70,46	28800	2,9							
23	919	63 (1)	28800	3,3							

(1) Finite transmission ratio *i*

P_1 = 2,2 kW

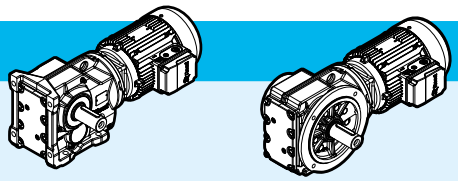

n_2 min^{-1}	M_2 N m	i	F_{r2} N	fs			kg foot HB	kg foot HBZ	kg flange HB	kg flange HBZ	p.
13	1657	113,56	14700	1,05	**iO 773 – HB3 100 LA 4 B20E**	**3**	77	83	85	91	210
15	1416	97,05	16300	1,25							
16	1298	88,97	17000	1,35							
18	1139	78,07	17800	1,55							
19	1080	73,99	18000	1,6							
22	945	64,75	18500	1,85							
25	851	58,34	18800	2,1							
28	747	51,18	19200	2,3							
32	659	45,16	19400	2,7							
36	584	40,04	19500	3							
41	513	35,2	19700	3,4							
47	451	30,89	19800	3,9							
49	427	29,27	19800	4,1							
56	374	25,62	19900	4,7							
24	885	60,66	9750	1	**iO 673 – HB3 100 LA 4 B16E**	**3**	58	64	64	70	207
25	836	57,28	10200	1,05							
30	712	48,77	11200	1,25							
32	647	44,32	11600	1,35							
38	560	38,39	12100	1,55							
40	520	35,62	12300	1,7							
48	441	30,22	12700	2							
53	398	27,28	12800	2,2							
60	350	24	13000	2,5							
64	331	22,66	13000	2,6							
75	281	19,3	13000	3							
82	256	17,54	13000	3,2							
95	222	15,19	13000	3,5							
109	193	13,22	13000	3,5							
115	182	12,48	13000	2,9							
135	155	10,63	13000	3,2							
149	141	9,66	13000	3,4							
172	122	8,37	13000	3,6							
198	106	7,28	12700	4							
32	648	44,43	7040	1,05	**iO 573 – HB3 100 LA 4 B16E**	**3**	54	60	61	67	204
37	562	38,49	7970	1,2							
40	521	35,7	8290	1,3							
48	442	30,28	8230	1,5							
53	399	27,34	8140	1,7							
60	351	24,05	8000	1,9							
63	331	22,71	7930	2							
74	282	19,34	7730	2,3							
82	256	17,57	7590	2,4							
95	222	15,22	7380	2,7							
109	193	13,25	7170	3							
121	174	11,92	6850	2,7							
128	164	11,26	6770	2,8							

P_1 = 2,2 kW

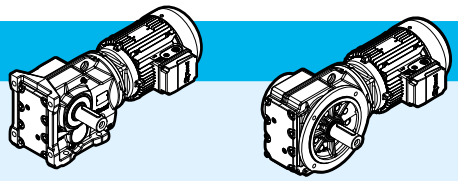

n_2 min^{-1}	M_2 N m	i	F_{r2} N	fs			kg foot HB	kg foot HBZ	kg flange HB	kg flange HBZ	p.
56	378	25,91	5260	1,2	**iO 473 – HB3 100 LA 4 B16E**	3	47	53	49	55	198
66	318	21,81	5260	1,4							
74	286	19,58	5240	1,6							
85	246	16,86	5180	1,75							
91	231	15,86	5140	1,85							
106	199	13,65	5050	2							
118	178	12,19	4970	2,2							
122	172	11,77	4870	1,65							
136	154	10,56	4790	1,85							
158	133	9,1	4660	2,1							
110	191	13,08	2380	0,95	**iO 373 – HB3 100 LA 4 B12E**	3	42	48	44	50	198
137	153	10,49	2430	1,2							
162	130	8,91	2440	1,4							
181	116	7,96	2430	1,5							
212	99	6,8	2400	1,7							
226	93	6,37	2390	1,7							
269	78	5,36	2340	1,95							

P_1 = 3 kW

n_2 min^{-1}	M_2 N m	i	F_{r2} N	fs			kg foot HB	kg foot HBZ	kg flange HB	kg flange HBZ	p.
7,8	3660	123,93 (1)	40000	1,35	**iO 973 – HB3 132 S 6 B30G**	3	210	221	226	237	216
9,2	3105	105,13	40000	1,55							
10	2859	96,8	40000	1,7							
11	2556	86,52	40000	1,9							
8,2	3479	176,05 (1)	40000	1,4	**iO 973 – HB3 112 MA 4 B30E**	3	188	194	205	211	216
9,5	3027	153,21 (1)	40000	1,6							
10	2772	140,28	40000	1,75							
12	2449	123,93 (1)	40000	2							
14	2077	105,13	40000	2,3							
15	1913	96,8	40000	2,5							
17	1710	86,52	40000	2,8							
19	1539	77,89 (1)	40000	3,2							
21	1394	70,54	40000	3,5							
23	1236	62,55	40000	3,9							
26	1117	56,55	40000	4,4							
9,8	2911	147,32 (1)	27000	1,05	**iO 873 – HB3 112 MA 4 B25E**	3	131	137	136	142	213
11	2508	126,91 (1)	27500	1,2							
13	2288	115,82	27800	1,3							
14	2029	102,71 (1)	28000	1,5							
17	1706	86,34	28300	1,75							
18	1568	79,34	28400	1,9							
21	1392	70,46	28600	2,2							
23	1245	63 (1)	28600	2,4							
26	1119	56,64	28700	2,7							
29	971	49,16	28800	3,1							
33	870	44,02	28800	3,3							
40	722	36,52 (1)	28200	3,9							

(1) Finite transmission ratio *i*

P_1 = 3 kW

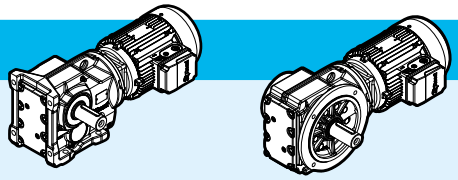

n_2 min^{-1}	M_2 N m	i	F_{r2} N	fs			kg foot HB	kg foot HBZ	kg flange HB	kg flange HBZ	p.
16	1758	88,97	13800	1	**iO 773 – HB3 112 MA 4 B20E**	3	86	92	94	100	210
19	1543	78,07	15500	1,15							
20	1462	73,99	16000	1,2							
22	1279	64,75	17100	1,35							
25	1153	58,34	17700	1,5							
28	1011	51,18	18300	1,75							
32	892	45,16	18700	1,95							
36	791	40,04	19000	2,2							
41	695	35,2	19300	2,5							
47	610	30,89	19500	2,9							
33	876	44,32	9820	1	**iO 673 – HB3 112 MA 4 B16E**	3	66	72	71	77	207
38	759	38,39	10900	1,15							
41	704	35,62	11300	1,25							
48	597	30,22	11900	1,45							
53	539	27,28	12200	1,6							
60	474	24	12500	1,85							
64	448	22,66	12600	1,95							
75	381	19,3	12900	2,2							
83	346	17,54	13000	2,4							
95	300	15,19	13000	2,6							
110	261	13,22	13000	2,6							
116	247	12,48	13000	2,2							
136	210	10,63	13000	2,4							
150	191	9,66	13000	2,5							
48	598	30,28	7190	1,1	**iO 573 – HB3 112 MA 4 B16E**	3	61	67	68	74	204
53	540	27,34	7190	1,25							
60	475	24,05	7170	1,4							
64	449	22,71	7150	1,5							
75	382	19,34	7060	1,7							
83	347	17,57	6980	1,75							
95	301	15,22	6860	2							
109	262	13,25	6710	2,2							
122	236	11,92	6380	1,95							
129	222	11,26	6330	2,1							
151	189	9,59	6160	2,4							
166	172	8,71	6040	2,5							
192	149	7,55	5870	2,7							
221	130	6,57	5700	2,9							

P_1 = 3 kW

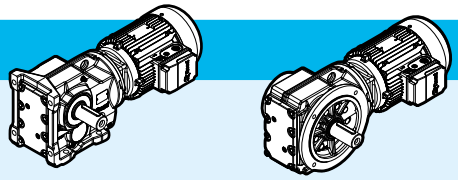

n_2 min^{-1}	M_2 N m	i	F_{r2} N	fs			kg foot HB	kg foot HBZ	kg flange HB	kg flange HBZ	p.
74	387	19,58	4450	1,15	**iO 473 – HB3 112 MA 4 B16E**	3	54	60	57	63	201
86	333	16,86	4500	1,3							
91	313	15,86	4510	1,35							
106	270	13,65	4500	1,5							
119	241	12,19	4480	1,6							
123	232	11,77	4360	1,2							
137	209	10,56	4340	1,35							
159	180	9,1	4280	1,55							
169	169	8,56	4250	1,6							
197	145	7,36	4160	1,75							
220	130	6,58	4090	1,85							
249	115	5,81	4000	2							
163	176	8,91	2020	1	**iO 373 – HB3 112 MA 4 B12E**	3	50	56	52	58	198
182	157	7,96	2050	1,1							
213	134	6,8	2080	1,25							
228	126	6,37	2090	1,25							
270	106	5,36	2090	1,45							

P_1 = 4 kW

9,5	4036	153,21 (1)	40000	1,2	**iO 973 – HB3 112 M 4 B30F**	3	190	199	207	216	216
10	3696	140,28	40000	1,3							
12	3265	123,93 (1)	40000	1,5							
14	2770	105,13	40000	1,75							
15	2550	96,8	40000	1,9							
17	2279	86,52	40000	2,1							
19	2052	77,89 (1)	40000	2,4							
21	1858	70,54	40000	2,6							
13	3051	115,82	26900	1	**iO 873 – HB3 112 M 4 B25F**	3	133	142	138	147	213
14	2706	102,71 (1)	27300	1,1							
17	2275	86,34	27800	1,3							
18	2090	79,34	28000	1,45							
21	1856	70,46	28200	1,6							
23	1660	63 (1)	28400	1,8							
26	1492	56,64	28500	2							
29	1295	49,16	28600	2,3							
33	1160	44,02	28200	2,5							
40	962	36,52 (1)	27200	2,9							

(1) Finite transmission ratio *i*

P_1 = 4 kW

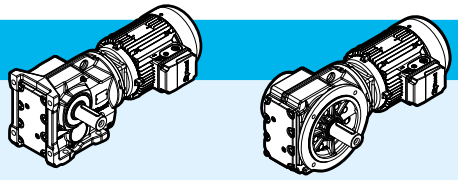

n_2 min^{-1}	M_2 N m	i	F_{r2} N	fs			kg foot HB	kg foot HBZ	kg flange HB	kg flange HBZ	p.
22	1706	64,75	14300	1,05	**iO 773 – HB3 112 M 4 B20F**	3	88	97	96	105	210
25	1537	58,34	15600	1,15							
28	1348	51,18	16700	1,3							
32	1190	45,16	17500	1,45							
36	1055	40,04	18100	1,65							
38	1011	38,39	18300	1,7							
41	927	35,2	18600	1,9							
47	814	30,89	19000	2,2							
50	771	29,27	19100	2,3							
57	675	25,62	19300	2,6							
63	608	23,08	19500	2,9							
72	533	20,25	19600	3,2							
48	796	30,22	10600	1,1	**iO 673 – HB3 112 M 4 B16F**	3	68	77	73	82	207
53	718	27,28	11200	1,2							
60	632	24	11700	1,35							
64	597	22,66	11900	1,45							
75	508	19,3	12400	1,65							
83	462	17,54	12600	1,8							
95	400	15,19	12800	1,9							
110	348	13,22	13000	1,95							
116	329	12,48	13000	1,65							
136	280	10,63	13000	1,8							
150	254	9,66	12800	1,9							
173	220	8,37	12400	2							
199	192	7,28	12000	2,2							
60	634	24,05	6140	1,05	**iO 573 – HB3 112 M 4 B16F**	3	63	72	70	79	204
64	598	22,71	6180	1,1							
75	509	19,34	6230	1,3							
83	463	17,57	6230	1,35							
95	401	15,22	6200	1,5							
109	349	13,25	6140	1,65							
122	314	11,92	5800	1,45							
129	297	11,26	5780	1,55							
151	253	9,59	5680	1,8							
166	230	8,71	5620	1,9							
192	199	7,55	5500	2							
221	173	6,57	5380	2,2							

P_1 = 5,5 kW

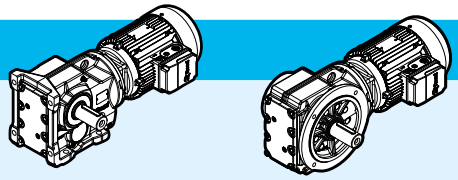

n_2 min^{-1}	M_2 N m	i	F_{r2} N	fs			kg foot HB	kg foot HBZ	kg flange HB	kg flange HBZ	p.
12	4428	123,93 (1)	40000	1,1	**iO 973 – HB3 132 S 4 B30G**	3	214	225	230	241	216
14	3756	105,13	40000	1,3							
15	3459	96,8	40000	1,4							
17	3092	86,52	40000	1,6							
19	2783	77,89 (1)	40000	1,75							
21	2520	70,54	40000	1,95							
24	2235	62,55	40000	2,2							
26	2021	56,55	39600	2,4							
31	1713	47,93 (1)	38400	2,8							
17	3085	86,34	26700	0,95	**iO 873 – HB3 132 S 4 B25G**	3	158	169	163	174	213
19	2835	79,34	27100	1,05							
21	2518	70,46	27500	1,2							
23	2251	63 (1)	27400	1,35							
26	2024	56,64	27200	1,5							
30	1757	49,16	26800	1,7							
33	1573	44,02	26400	1,85							
40	1305	36,52 (1)	25700	2,1							
47	1121	31,39	25100	2,7							
53	996	27,88	24600	2,9							
33	1614	45,16	14800	1,1	**iO 773 – HB3 132 S 4 B20G**	3	110	121	118	129	210
37	1431	40,04	16100	1,2							
48	1103	30,89	17900	1,6							
50	1046	29,27	18100	1,65							
57	915	25,62	18600	1,9							
64	825	23,08	18900	2,1							
73	723	20,25	19200	2,4							
82	638	17,87	19400	2,5							
93	566	15,84	19100	2,7							
109	483	13,52	18500	3,1							
119	441	12,36	17800	2,4							
136	387	10,84	17400	2,6							
61	857	24	9910	1	**iO 673 – HB3 132 S 4 B16G**	3	91	102	97	108	207
65	810	22,66	10400	1,05							
76	689	19,3	11300	1,25							
84	626	17,54	11700	1,3							
97	543	15,19	12200	1,4							
111	472	13,22	12500	1,4							
118	446	12,48	12600	1,2							
138	380	10,63	12400	1,3							
152	345	9,66	12200	1,4							
176	299	8,37	11900	1,45							
202	260	7,28	11600	1,6							

(1) Finite transmission ratio *i*

P_1 = 7,5 kW

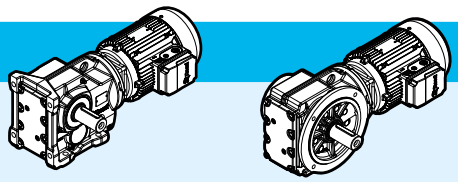

n_2 min^{-1}	M_2 N m	i	F_{r2} N	fs			kg foot HB	kg foot HBZ	kg flange HB	kg flange HBZ	p.
15	4749	96,8	38400	1,05	**iO 973 – HB3 132 M 4 B30G**	3	222	233	238	249	216
17	4245	86,52	38300	1,15							
19	3821	77,89 (1)	38100	1,25							
21	3460	70,54	37800	1,4							
23	3069	62,55	37400	1,6							
26	2774	56,55	37000	1,75							
30	2351	47,93 (1)	36200	2,1							
35	2054	41,87	35500	2,4							
38	1878	38,3	35000	2,6							
43	1679	34,23	34300	2,9							
23	3091	63 (1)	24100	0,95	**iO 873 – HB3 132 M 4 B25G**	3	166	177	171	182	213
26	2779	56,64	24200	1,1							
30	2412	49,16	24200	1,25							
33	2160	44,02	24100	1,35							
40	1792	36,52 (1)	23800	1,55							
47	1540	31,39	23400	1,95							
52	1367	27,88	23100	2,1							
59	1222	24,92	22700	2,3							
65	1099	22,41	22400	2,3							
75	954	19,45	21800	2,7							
84	854	17,42	21400	2,8							
91	785	16	20500	2,5							
101	709	14,45	20600	3,3							
47	1515	30,89	15700	1,15	**iO 773 – HB3 132 M 4 B20G**	3	118	129	126	137	210
50	1436	29,27	16200	1,2							
57	1257	25,62	17200	1,4							
63	1132	23,08	17800	1,55							
72	993	20,25	18400	1,7							
82	876	17,87	18500	1,85							
92	777	15,84	18200	2							
108	663	13,52	17700	2,3							
118	606	12,36	17000	1,7							
135	532	10,84	16600	1,85							
153	469	9,56	16200	2							
172	416	8,48	15800	2,1							
202	355	7,24	15300	2,3							

(1) Finite transmission ratio *i*

P_1 = 9,2 kW

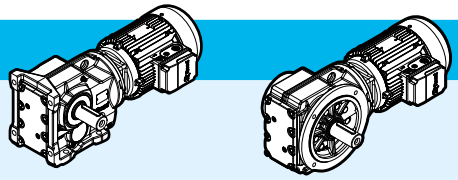

n_2 min^{-1}	M_2 N m	i	F_{r2} N	fs			kg foot HB	kg foot HBZ	kg flange HB	kg flange HBZ	p.
19	4687	77,89 (1)	35100	1,05	**iO 973 – HB3 132 MB 4 B30H**	3	224	236	241	253	216
21	4245	70,54	35100	1,15							
23	3764	62,55	35000	1,3							
26	3403	56,55	34800	1,45							
30	2884	47,93 (1)	34400	1,7							
35	2519	41,87	33900	1,95							
38	2304	38,3	33500	2,1							
43	2059	34,23	33000	2,4							
47	1854	30,82	32400	2,6							
52	1679	27,91	31900	2,9							
59	1489	24,75	31200	3,3							
30	2958	49,16	22000	1	**iO 873 – HB3 132 MB 4 B25H**	3	168	180	174	186	213
33	2649	44,02	22200	1,1							
40	2198	36,52 (1)	22200	1,25							
47	1889	31,39	22000	1,6							
52	1677	27,88	21900	1,75							
59	1499	24,92	21600	1,85							
65	1348	22,41	21400	1,9							
75	1170	19,45	21000	2,2							
84	1048	17,42	20600	2,3							
91	963	16	19700	2							
101	869	14,45	20000	2,7							
116	756	12,56	19500	3							
131	672	11,17	18500	2,5							
146	601	10	18200	2,8							
63	1389	23,08	16500	1,25	**iO 773 – HB3 132 MB 4 B20H**	3	121	133	129	141	210
72	1218	20,25	17400	1,4							
82	1075	17,87	17600	1,5							
92	953	15,84	17300	1,65							
108	814	13,52	17000	1,85							
118	743	12,36	16200	1,4							
135	652	10,84	15900	1,55							
153	575	9,56	15600	1,65							
172	510	8,48	15300	1,75							
202	436	7,24	14900	1,9							

(1) Finite transmission ratio *i*

P_1 = 11 kW

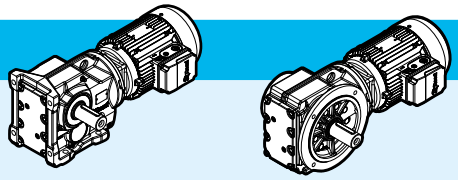

n_2 min^{-1}	M_2 N m	i	F_{r2} N	fs			kg foot HB	kg foot HBZ	kg flange HB	kg flange HBZ	p.
21	5041	70,54	32300	0,95	**iO 973 – HB3 160 M 4 B30H**	3	172	–	188	–	216
24	4470	62,55	32500	1,1							
26	4041	56,55	32500	1,2							
31	3425	47,93 (1)	32400	1,4							
35	2992	41,87	32200	1,65							
38	2736	38,3	31900	1,8							
43	2446	34,23	31600	2							
48	2202	30,82	31200	2,2							
53	1994	27,91	30700	2,4							
59	1768	24,75	30200	2,8							
66	1599	22,37	29700	3							
33	3146	44,02	20100	0,9	**iO 873 – HB3 160 M 4 B25H**	3	114	–	119	–	213
40	2610	36,52 (1)	20500	1,05							
47	2243	31,39	20600	1,35							
53	1992	27,88	20500	1,45							
59	1781	24,92	20400	1,55							
66	1601	22,41	20300	1,6							
76	1390	19,45	20000	1,85							
84	1244	17,42	19800	1,95							
92	1143	16	18800	1,7							
102	1032	14,45	19300	2,3							
117	898	12,56	18900	2,5							
132	798	11,17	17900	2,1							
147	714	10	17600	2,4							
177	593	8,29	17000	2,6							
204	515	7,21	16600	2,8							
64	1649	23,08	14700	1,05	**iO 773 – HB3 160 M 4 B20H**	3	65	–	73	–	210
73	1447	20,25	16100	1,2							
82	1277	17,87	16600	1,25							
93	1132	15,84	16500	1,35							
109	966	13,52	16200	1,55							
119	883	12,36	15500	1,2							
136	774	10,84	15300	1,3							
154	683	9,56	15000	1,4							
173	606	8,48	14800	1,45							
203	517	7,24	14400	1,6							

(1) Finite transmission ratio *i*

P_1 = 15 kW

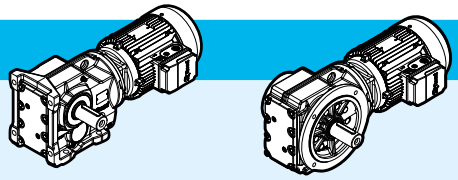

n_2 min^{-1}	M_2 N m	i	F_{r2} N	fs			kg foot HB	kg foot HBZ	kg flange HB	kg flange HBZ	p.
31	4671	47,93 (1)	28100	1,05	**iO 973 – HB3 160 L 4 B30H**	3	172	–	188	–	216
35	4080	41,87	28400	1,2							
38	3731	38,3	28500	1,3							
43	3335	34,23	28500	1,45							
48	3002	30,82	28400	1,6							
53	2719	27,91	28200	1,8							
59	2411	24,75	28000	2							
66	2180	22,37	27700	2,2							
78	1848	18,96	27100	2,6							
89	1614	16,56	26600	3							
47	3058	31,39	17300	1	**iO 873 – HB3 160 L 4 B25H**	3	114	–	119	–	213
53	2716	27,88	17600	1,05							
59	2428	24,92	17900	1,15							
66	2183	22,41	18000	1,2							
76	1895	19,45	18000	1,35							
84	1697	17,42	18000	1,45							
92	1559	16	16800	1,25							
102	1408	14,45	17800	1,7							
117	1224	12,56	17600	1,85							
132	1088	11,17	16600	1,55							
147	974	10	16400	1,75							
177	808	8,29	16000	1,9							
204	703	7,21	15700	2,1							

P_1 = 18,5 kW

35	5049	41,87	25100	0,95	**iO 973 – HB3 180 M 4 B30L**	3	172	–	188	–	216
48	3715	30,82	26000	1,3							
53	3365	27,91	26000	1,45							
59	2984	24,75	26000	1,65							
65	2698	22,37	25900	1,8							
77	2286	18,96	25600	2,1							
88	1997	16,56	25300	2,4							
106	1670	13,85	24700	2,7							
122	1446	11,99	24200	3							
59	3005	24,92	15600	0,95	**iO 873 – HB3 180 M 4 B25L**	3	114	–	119	–	213
65	2702	22,41	15900	0,95							
75	2345	19,45	16200	1,1							
84	2100	17,42	16400	1,15							
101	1742	14,45	16500	1,35							
117	1515	12,56	16400	1,5							
131	1346	11,17	15400	1,25							
147	1205	10	15300	1,4							
177	1000	8,29	15100	1,55							
203	870	7,21	14900	1,65							

(1) Finite transmission ratio *i*

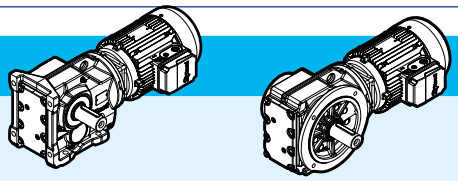

P_1 = 22 kW

n_2 min^{-1}	M_2 N m	i	F_{r2} N	fs			kg foot HB	kg foot HBZ	kg flange HB	kg flange HBZ	p.
48	4403	30,82	23500	1,1	**iO 973 – HB3 180 L 4 B30L**	3	172	–	188	–	216
53	3988	27,91	23800	1,2							
59	3536	24,75	24100	1,4							
66	3197	22,37	24200	1,5							
78	2710	18,96	24100	1,8							
89	2367	16,56	24000	2,1							
106	1979	13,85	23700	2,3							
123	1714	11,99	23300	2,5							
141	1488	10,41	21800	2,1							
169	1244	8,71	21300	2,3							
76	2779	19,45	14500	0,9	**iO 873 – HB3 180 L 4 B25L**	3	114	–	119	–	213
84	2489	17,42	14800	1							
102	2065	14,45	15200	1,15							
117	1795	12,56	15300	1,25							
132	1595	11,17	14200	1,05							
147	1429	10	14300	1,2							
177	1185	8,29	14300	1,3							
204	1031	7,21	14200	1,4							

P_1 = 30kW

59	4822	24,75	19600	1	**iO 973 – HB3 200 L 4 B30M**	3	178	–	194	–	216
66	4360	22,37	20200	1,1							
78	3695	18,96	20700	1,3							
89	3227	16,56	21000	1,5							
106	2699	13,85	21200	1,7							
123	2337	11,99	21100	1,85							
141	2029	10,41	19500	1,55							
169	1697	8,71	19400	1,7							

page intentionally left blank

12

Bevel helical Dimensional drawings - iO

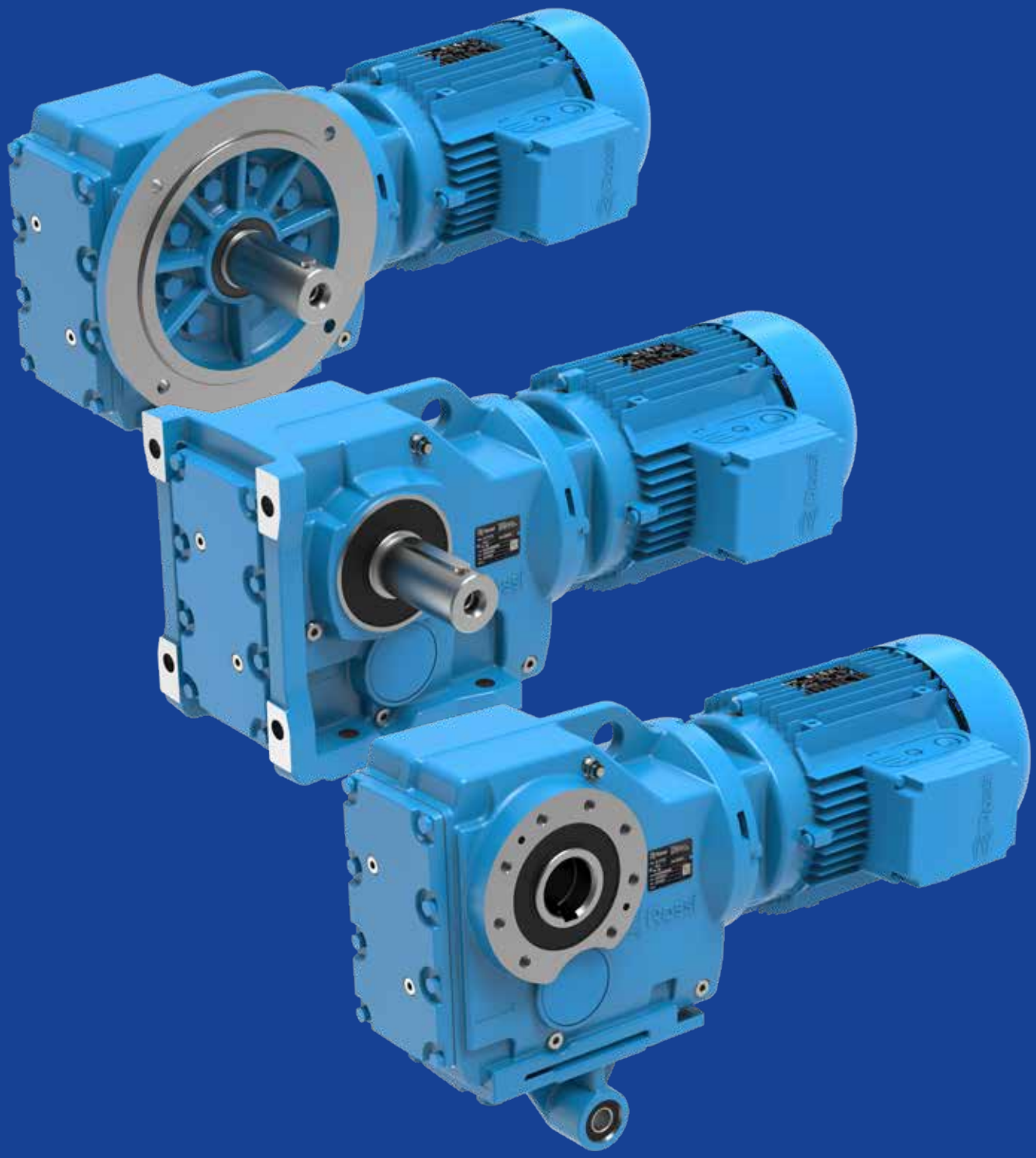

Section contents

12.1	iO 373	198
12.2	iO 473	201
12.3	iO 573	204
12.4	iO 673	207
12.5	iO 773	210
12.6	iO 873	213
12.7	iO 973	216

12.1

iO 373 PE

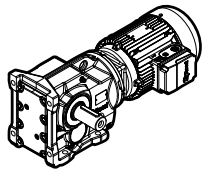

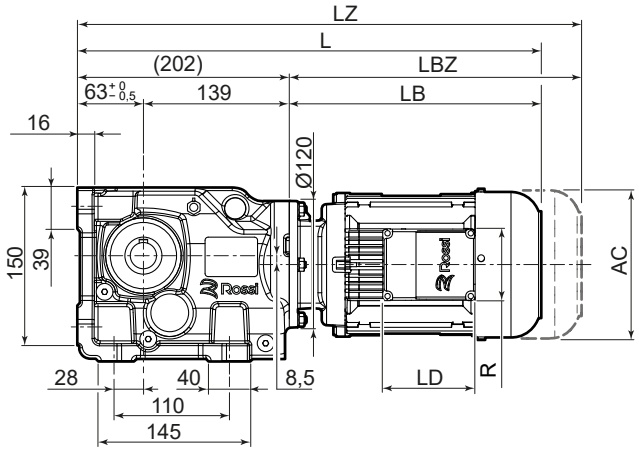

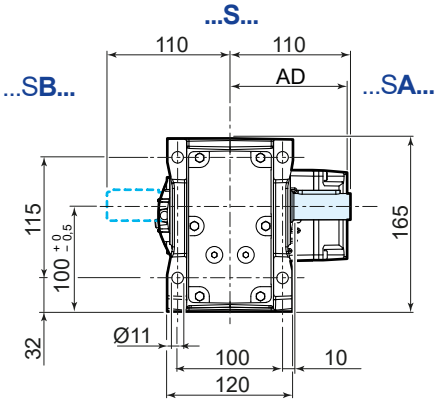

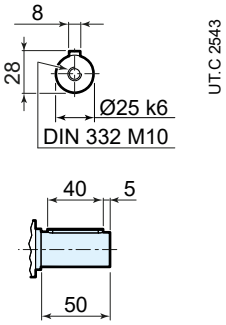

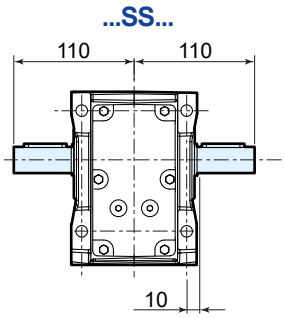

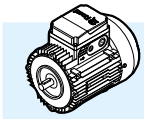

	63	71	80	90S [2) 3)]	90L [3)]	100 [3)]	112 [3)]
AC	123	138	156	176	176	194	218
AD	95	112	121	141	141	151	163
LB	211	237	266	290	320	351	389
LBZ	266	299	335	369	399	446	488
L [1)]	413	439	468	492	522	553	591
LZ [1)]	468	501	537	571	601	648	690
LD	103	103	103	136	136	136	136
R	86	86	86	106	106	106	106

165
83
278

[1)] See also pages 90, 91

For details about drive end **A** and **B** see page 41

[2)] For motors HB3-HB3Z 90S 2, HB3-HB3Z 90S 4, HB3-HB3Z 90S 6 dimensions as motor size 90L

[3)] The motor protrudes the gear reducer foot mounting surface

iO 373 FE...F316

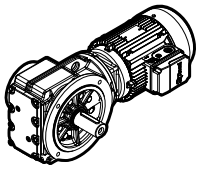

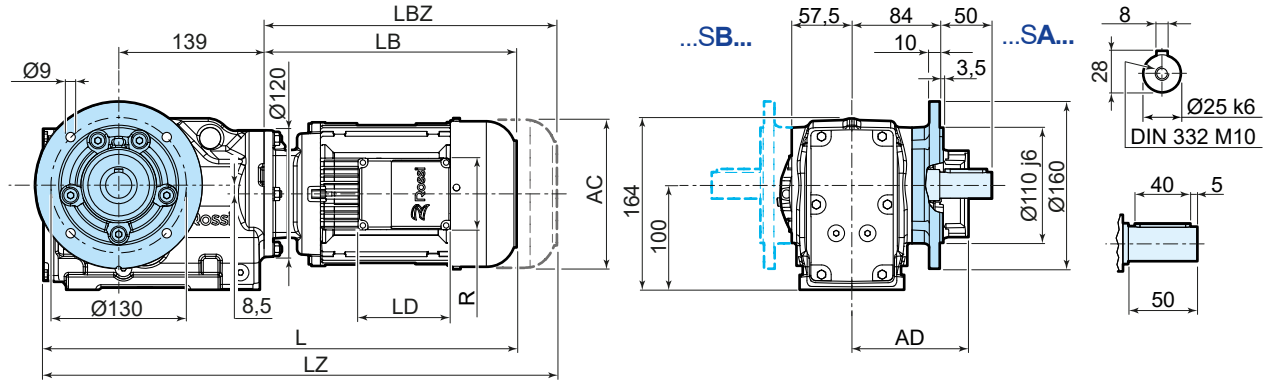

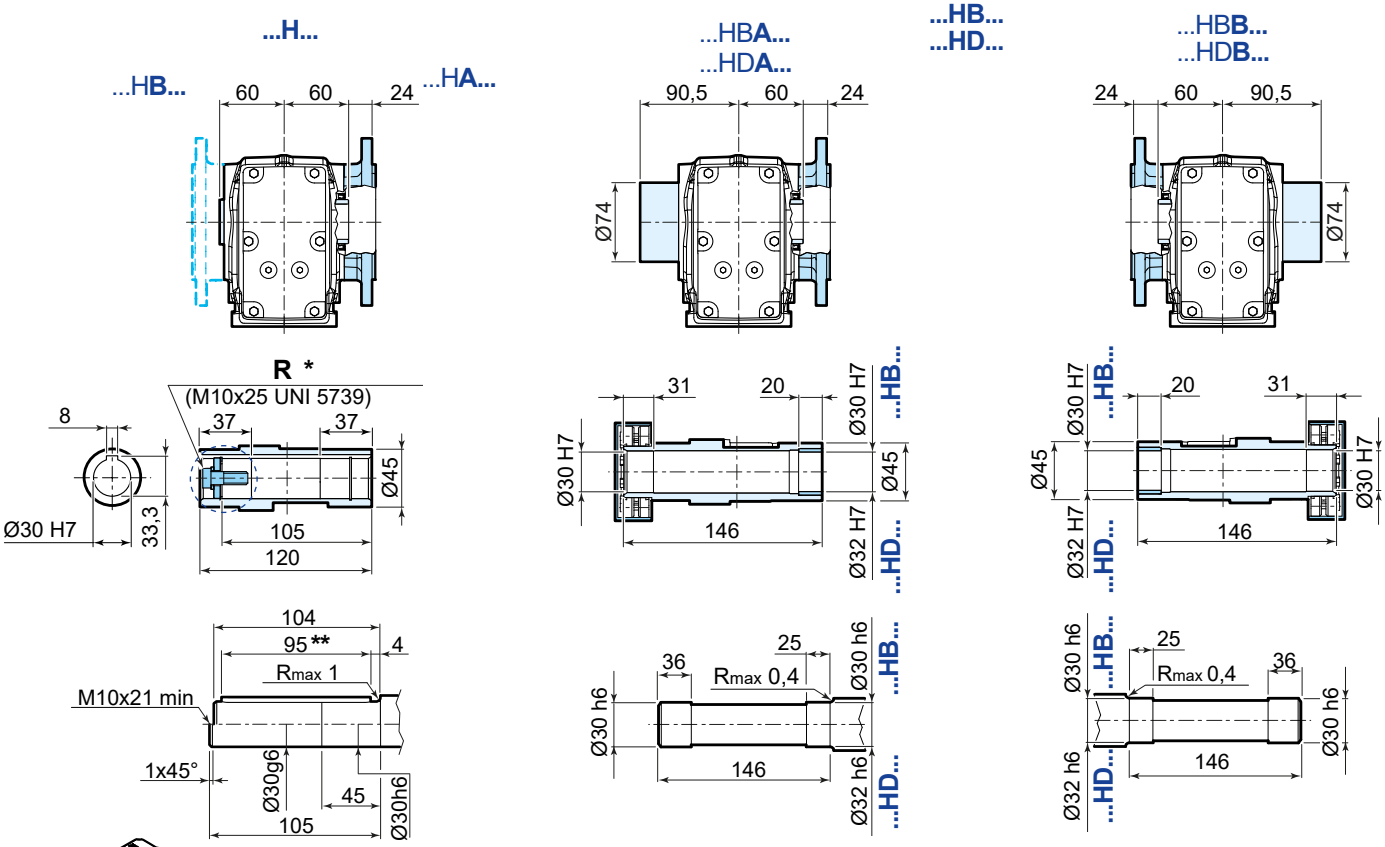

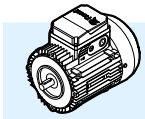

	63	71	80	90S [2]	90L	100	112
AC	123	138	156	176	176	194	218
AD	95	112	121	141	141	151	163
LB	211	237	266	290	320	351	389
LBZ	266	299	335	369	399	446	488
L [1]	422	448	477	501	531	562	600
LZ [1]	477	510	546	580	610	657	699
LD	103	103	103	136	136	136	136
R	86	86	86	106	106	106	106

165
83
278
FB14
88

[1] See also pages 90, 91
[2] For motors HB3-HB3Z 90S 2, HB3-HB3Z 90S 4, HB3-HB3Z 90S 6 dimensions as motor size 90L

For details about drive end **A** and **B** see page 41
* options on request
** both version with key

iO 373 SE

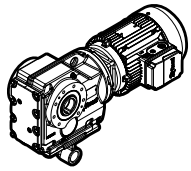

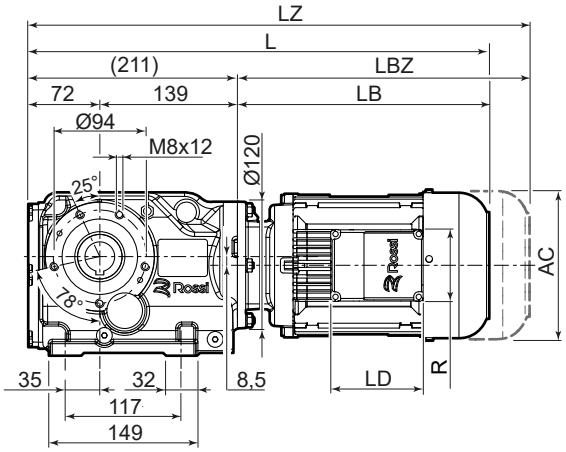

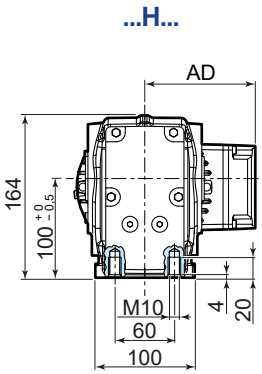

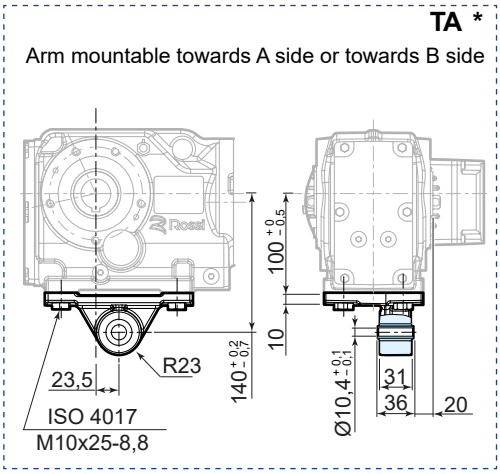

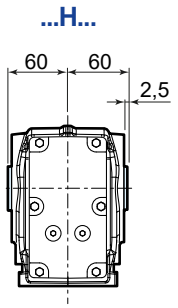

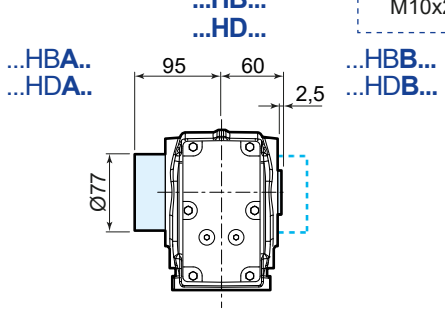

UT.C 2545

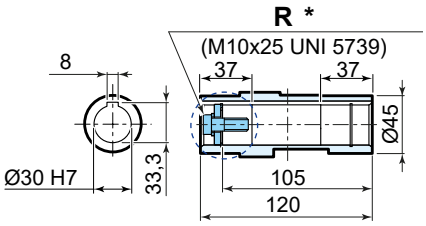

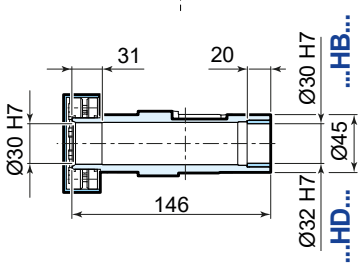

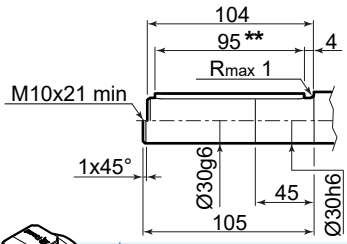

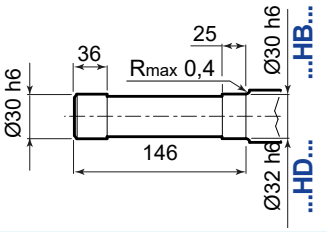

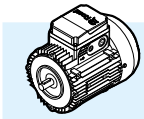

	63	71	80	90S [2]	90L	100	112
AC	123	138	156	176	176	194	218
AD	95	112	121	141	141	151	163
LB	211	237	266	290	320	351	389
LBZ	266	299	335	369	399	446	488
L [1]	422	448	477	501	531	562	600
LZ [1]	477	510	546	580	610	657	699
LD	103	103	103	136	136	136	136
R	86	86	86	106	106	106	106

165
83
278

[1] See also pages 90, 91
[2] For motors HB3-HB3Z 90S 2, HB3-HB3Z 90S 4, HB3-HB3Z 90S 6 dimensions as motor size 90L

For details about drive end **A** and **B** see page 41
* options on request
** both version with key

12.2

iO 473 PE

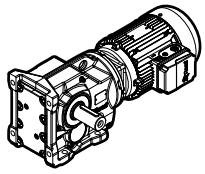

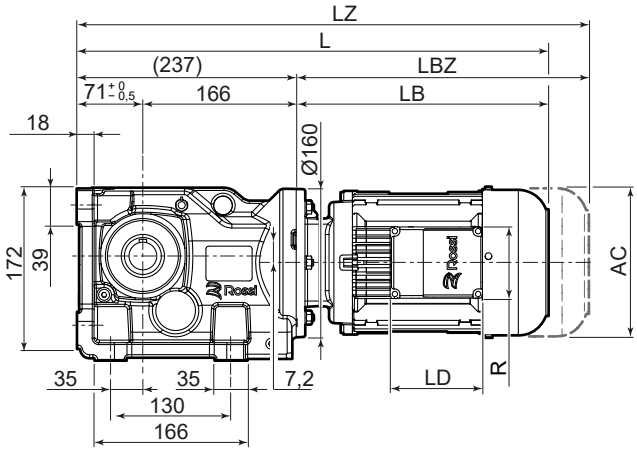

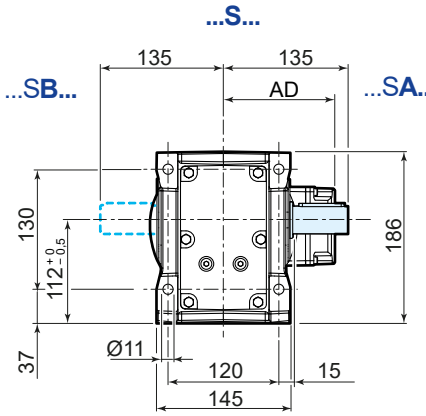

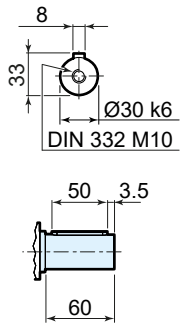

UT.C 2546

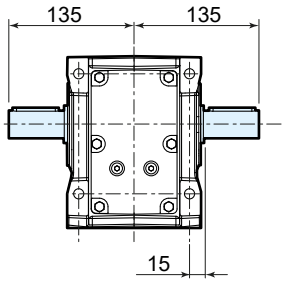

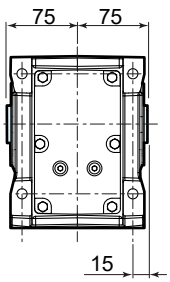

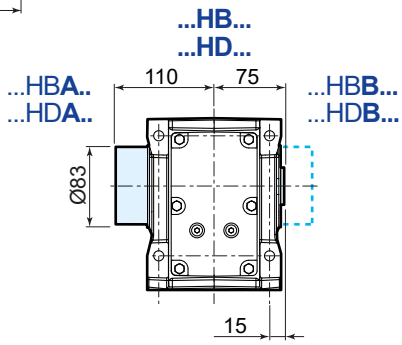

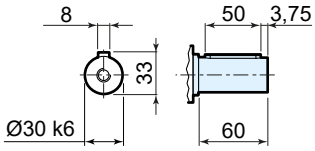

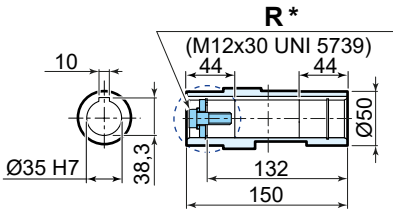

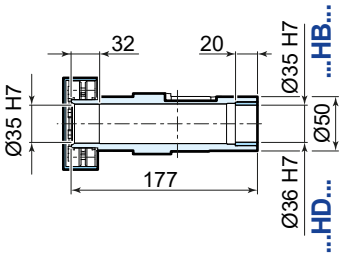

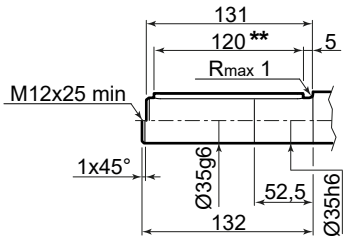

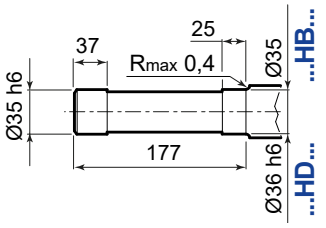

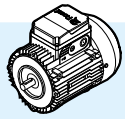

	63	71	80	90S [2]	90L	100	112 [3]
AC	123	138	156	176	176	194	218
AD	95	112	121	141	141	151	163
LB	211	237	260	290	320	351	389
LBZ	266	299	335	369	399	446	488
L [1]	448	474	503	527	557	588	626
LZ [1]	503	536	572	606	636	683	725
LD	103	103	103	136	136	136	136
R	86	86	86	106	106	106	106

165
83
278

[1] See also pages 90, 91

[2] For motors HB3-HB3Z 90S 2, HB3-HB3Z 90S 4, HB3-HB3Z 90S 6 dimensions as motor size 90L

[3] The motor protrudes the gear reducer foot mounting surface

For details about drive end **A** and **B** see page 41

* options on request

** both version with key

iO 473 FE...F420

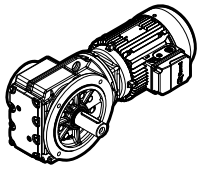

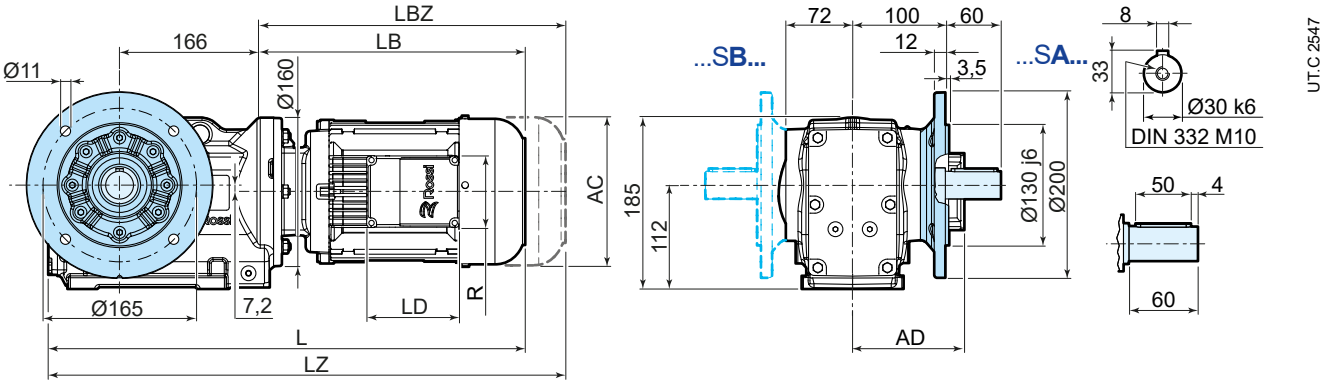

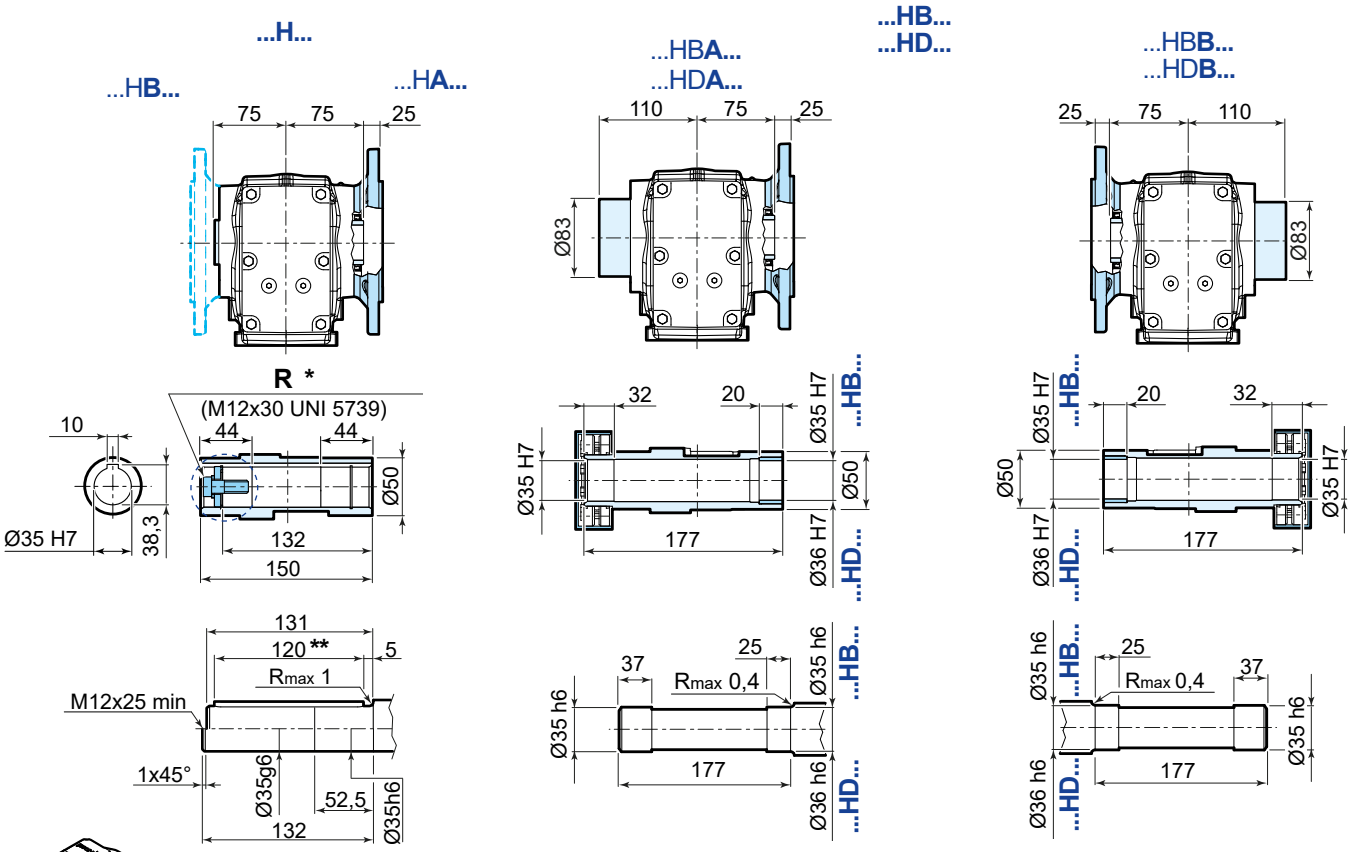

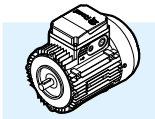

	63	71	80	90S [2]	90L	100	112
AC	123	138	156	176	176	194	218
AD	95	112	121	141	141	151	163
LB	211	237	260	290	320	351	389
LBZ	266	299	335	369	399	446	488
L [1]	454	480	509	533	563	594	632
LZ [1]	509	542	578	612	642	689	731
LD	103	103	103	136	136	136	136
R	86	86	86	106	106	106	106

165
83
278
FB14
88

[1] See also pages 90, 91
[2] For motors HB3-HB3Z 90S 2, HB3-HB3Z 90S 4, HB3-HB3Z 90S 6 dimensions as motor size 90L

For details about drive end **A** and **B** see page 41
* options on request
** both version with key

iO 473 SE

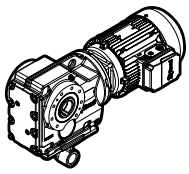

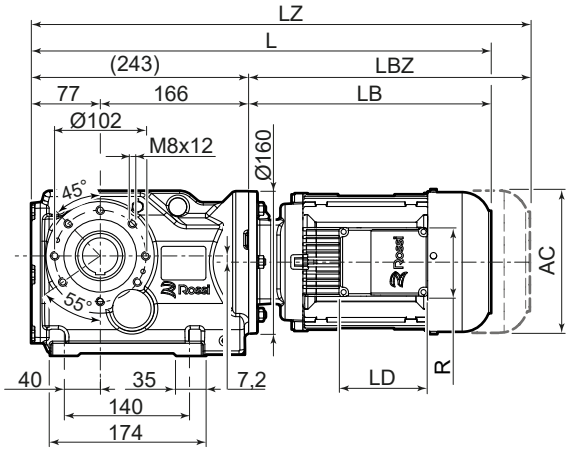

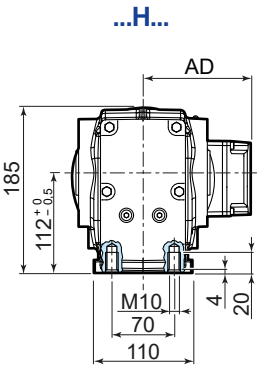

TA *

Arm mountable towards A side or towards B side

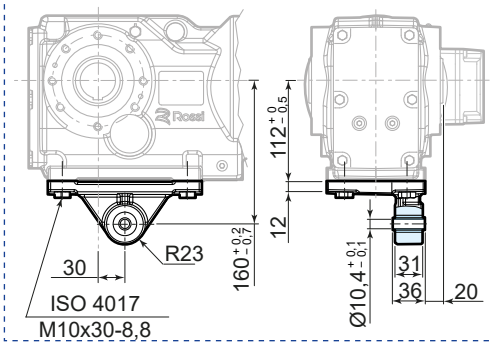

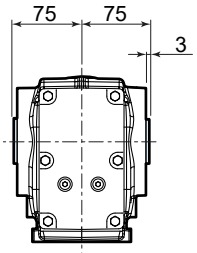

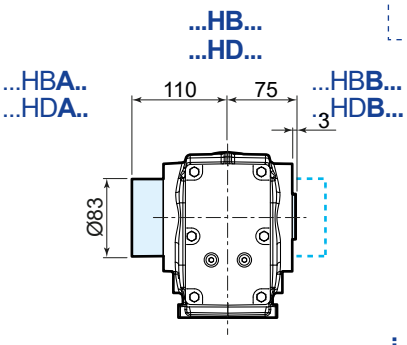

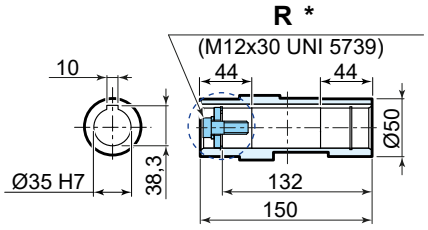

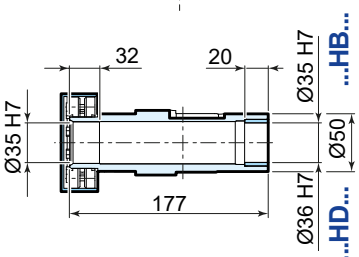

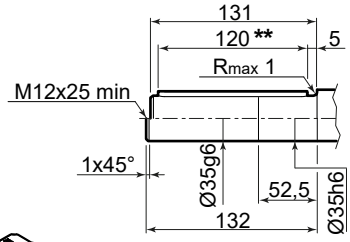

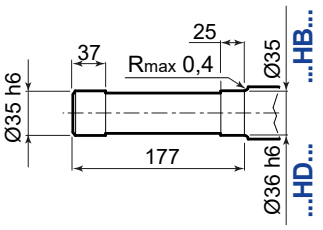

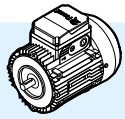

	63	71	80	90S [2]	90L	100	112
AC	123	138	156	176	176	194	218
AD	95	112	121	141	141	151	163
LB	211	237	260	290	320	351	389
LBZ	266	299	335	369	399	446	488
L [1]	454	480	509	533	563	594	632
LZ [1]	509	542	578	612	642	689	731
LD	103	103	103	136	136	136	136
R	86	86	86	106	106	106	106

165

83

278

[1] See also pages 90, 91
[2] For motors HB3-HB3Z 90S 2, HB3-HB3Z 90S 4, HB3-HB3Z 90S 6 dimensions as motor size 90L

For details about drive end **A** and **B** see page 41
* options on request
** both version with key

UT.C 2548

12.3

iO 573 PE

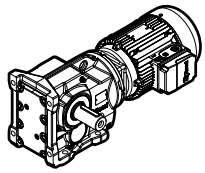

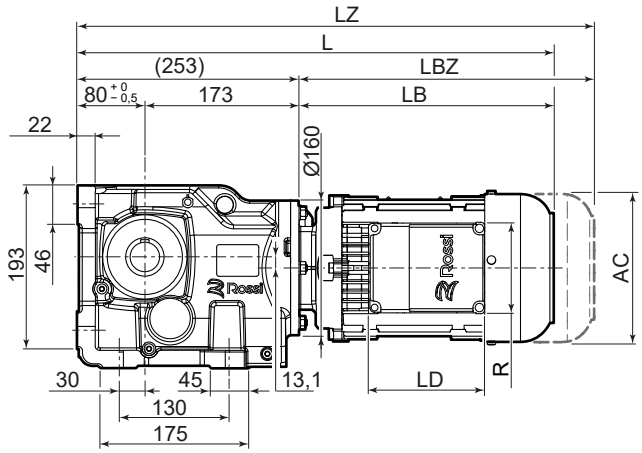

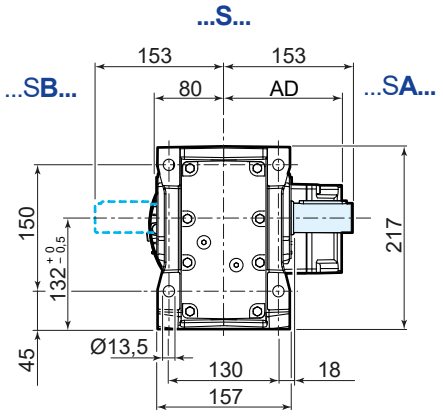

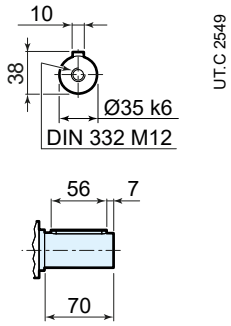

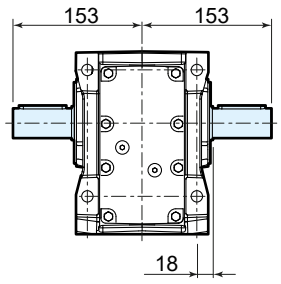

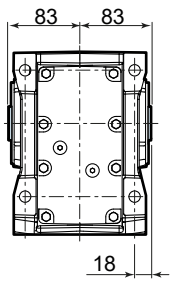

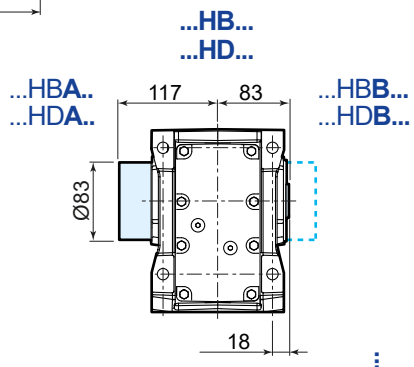

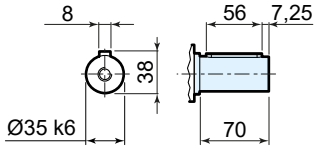

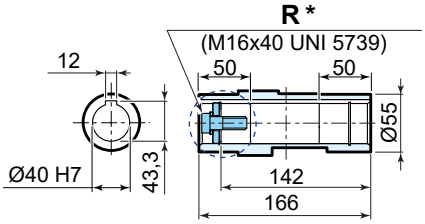

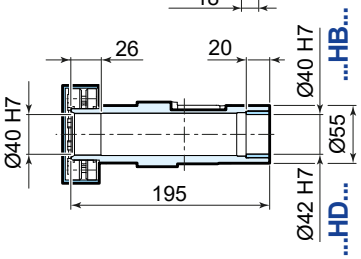

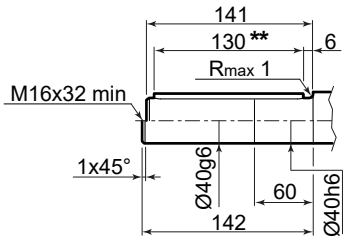

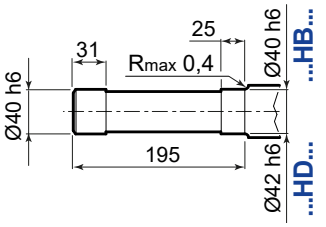

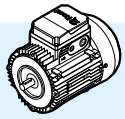

	63	71	80	90S [2]	90L	100	112	132S [3] [4]	132M [4]
AC	123	138	156	176	176	194	218	257	257
AD	95	112	121	141	141	151	163	194	194
LB	205	231	260	283	313	345	383	439	499
LBZ	260	293	329	362	392	440	482	547	607
L [1]	458	484	513	536	566	598	636	692	752
LZ [1]	513	546	582	615	645	693	735	800	860
LD	103	103	103	136	136	136	136	190	190
R	86	86	86	106	106	106	106	148	148

165
83
278

[1] See also pages 90, 91

[2] For motors HB3-HB3Z 90S 2, HB3-HB3Z 90S 4, HB3-HB3Z 90S 6 dimensions as motor size 90L

[3] For motors HB3-HB3Z 132 SB 2, HB3-HB3Z 132SC 2, HB3-HB3Z 132S 4 dimensions as motor size 132M

[4] The motor protrudes the gear reducer foot mounting surface

For details about drive end **A** and **B** see page 41

* options on request

** both version with key

Dimensional drawings - iO

iO 573 FE...F525

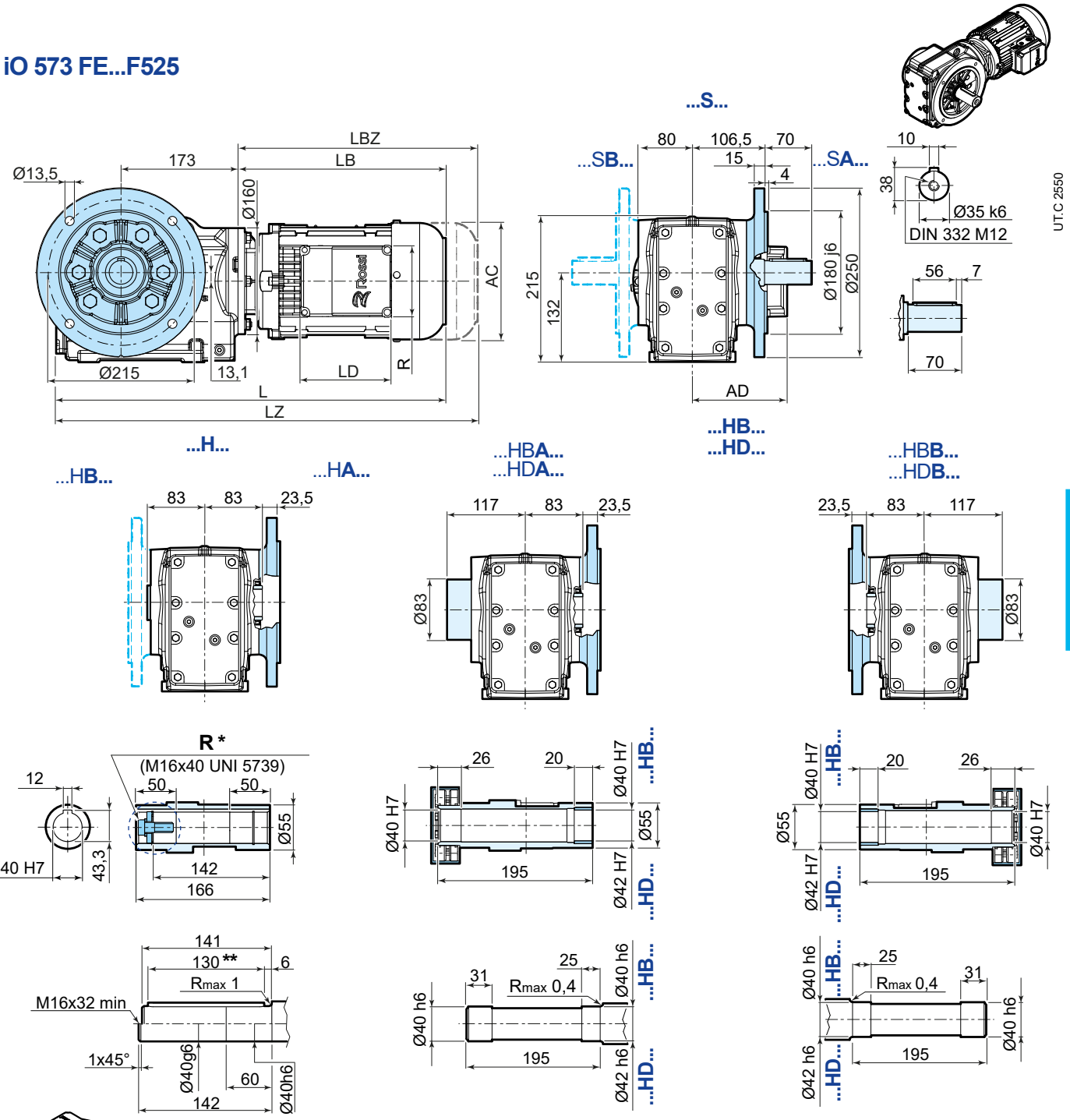

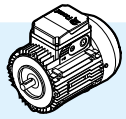

	63	71	80	90S [2]	90L	100	112	132S [3]	132M
AC	123	138	156	176	176	194	218	257	257
AD	95	112	121	141	141	151	163	194	194
LB	205	231	260	283	313	345	383	439	499
LBZ	260	293	329	362	392	440	482	547	607
L [1]	474	500	529	552	582	614	652	708	768
LZ [1]	529	562	598	631	661	709	751	816	876
LD	103	103	103	136	136	136	136	190	190
R	86	86	86	106	106	106	106	148	148

165
83
278
FB14
88

[1] See also pages 90, 91
[2] For motors HB3-HB3Z 90S 2, HB3-HB3Z 90S 4, HB3-HB3Z 90S 6 dimensions as motor size 90L
[3] For motors HB3-HB3Z 132 SB 2, HB3-HB3Z 132SC 2, HB3-HB3Z 132S 4 dimensions as motor size 132M

For details about drive end **A** and **B** see page 41
* options on request
** both version with key

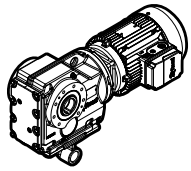

iO 573 SE

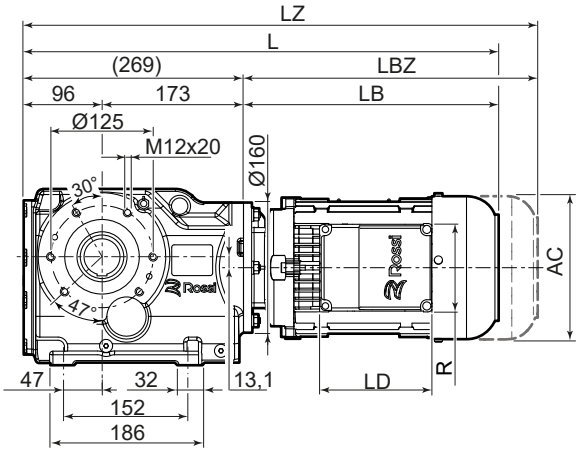

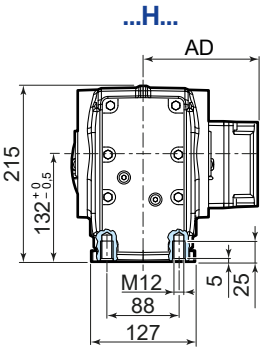

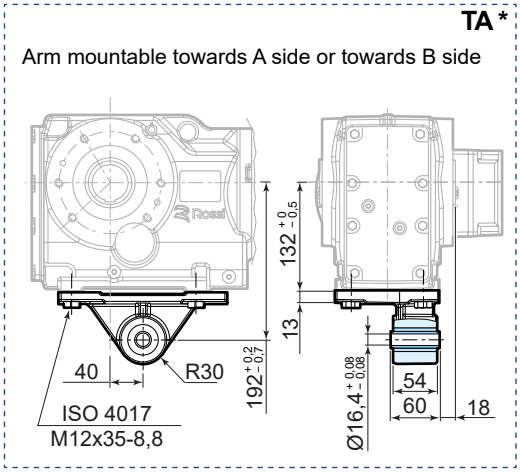

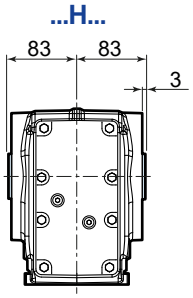

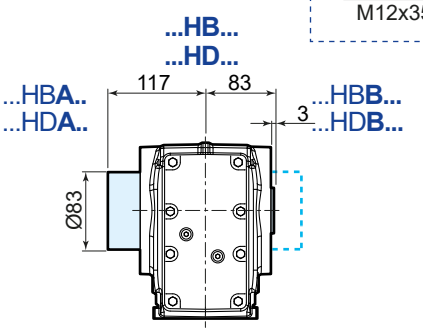

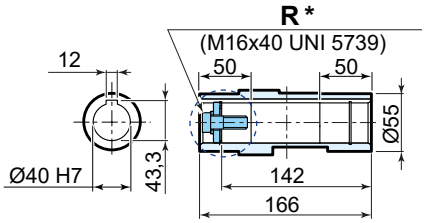

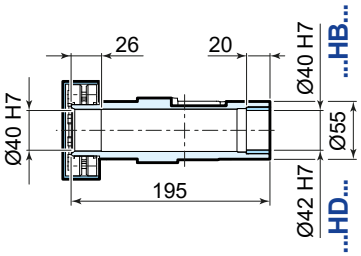

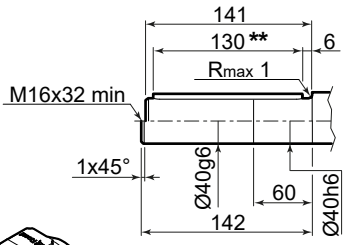

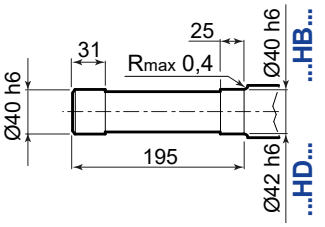

UT.C 2551

	63	71	80	90S [2]	90L	100	112	132S [3]	132M
AC	123	138	156	176	176	194	218	257	257
AD	95	112	121	141	141	151	163	194	194
LB	205	231	260	283	313	345	383	439	499
LBZ	260	293	329	362	392	440	482	547	607
L [1]	474	500	529	552	582	614	652	708	768
LZ [1]	529	562	598	631	661	709	751	816	876
LD	103	103	103	136	136	136	136	190	190
R	86	86	86	106	106	106	106	148	148

165
83
278

[1] See also pages 90, 91
[2] For motors HB3-HB3Z 90S 2, HB3-HB3Z 90S 4, HB3-HB3Z 90S 6 dimensions as motor size 90L
[3] For motors HB3-HB3Z 132 SB 2, HB3-HB3Z 132SC 2, HB3-HB3Z 132S 4 dimensions as motor size 132M

For details about drive end **A** and **B** see page 41
* options on request
** both version with key

12.4

iO 673 PE

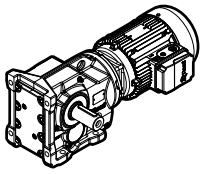

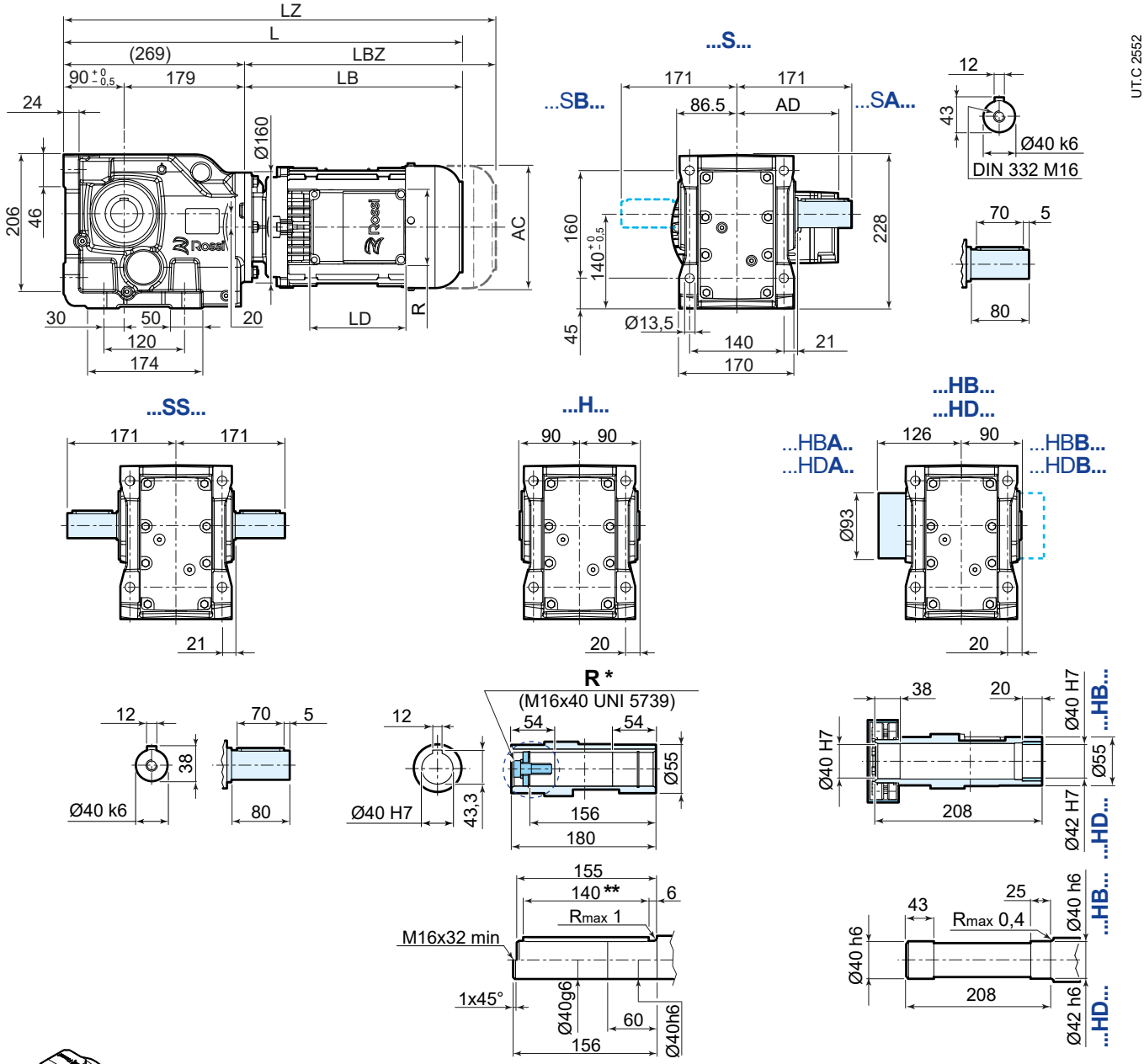

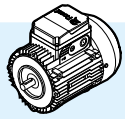

	63	71	80	90S [2]	90L	100	112	132S [3] [4]	132M [4]
AC	123	138	156	176	176	194	218	257	257
AD	95	112	121	141	141	151	163	194	194
LB	205	231	260	283	313	345	383	439	499
LBZ	260	293	329	362	392	440	482	547	607
L [1]	474	500	529	552	582	614	652	708	768
LZ [1]	529	562	598	631	661	709	751	816	876
LD	103	103	103	136	136	136	136	190	190
R	86	86	86	106	106	106	106	148	148

165
83
278

[1] See also pages 90, 91

For details about drive end **A** and **B** see page 41

[2] For motors HB3-HB3Z 90S 2, HB3-HB3Z 90S 4, HB3-HB3Z 90S 6 dimensions as motor size 90L

[3] For motors HB3-HB3Z 132 SB 2, HB3-HB3Z 132SC 2, HB3-HB3Z 132S 4 dimensions as motor size 132M

[4] The motor protrudes the gear reducer foot mounting surface

* options on request

** both version with key

iO 673 FE...F625

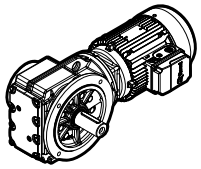

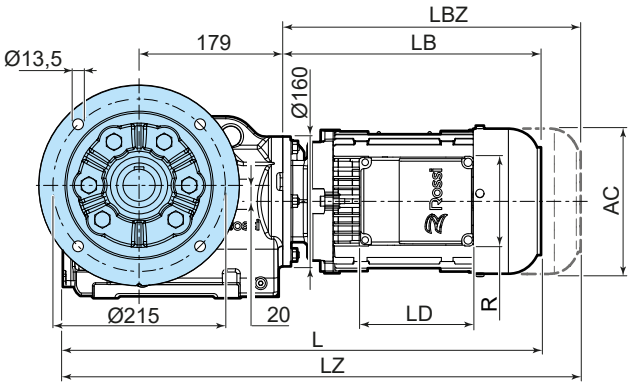

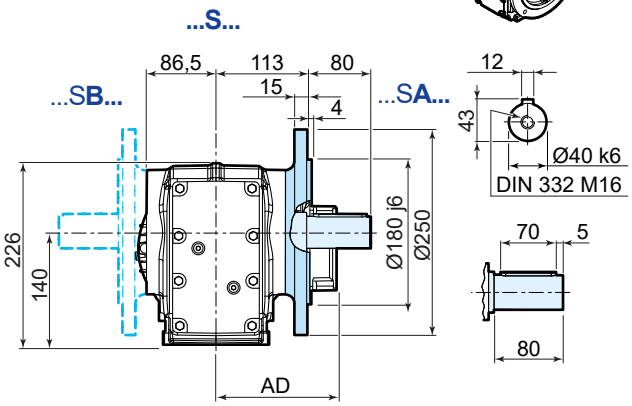

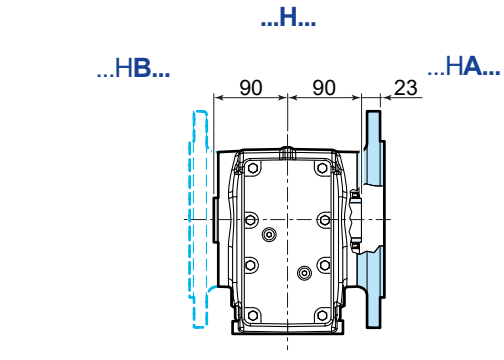

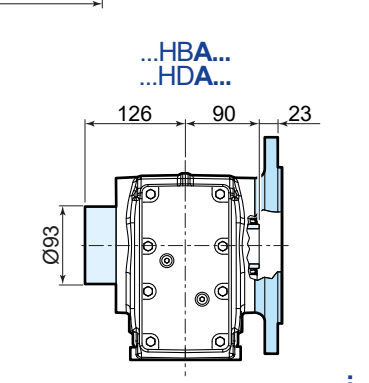

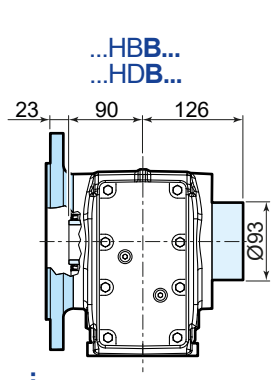

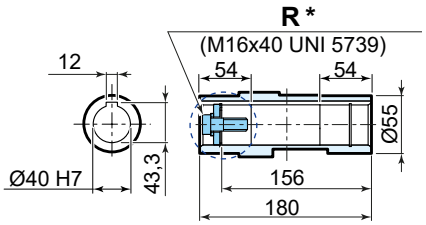

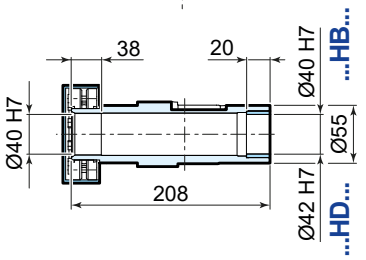

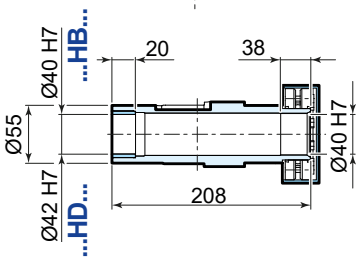

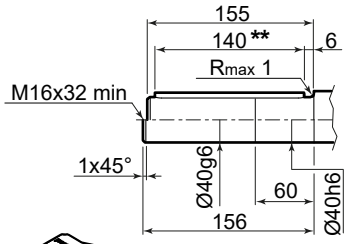

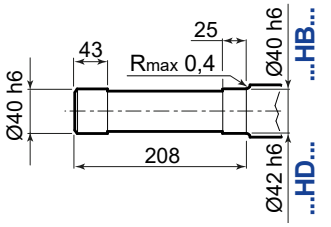

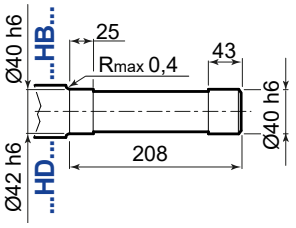

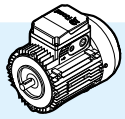

	63	71	80	90S [2]	90L	100	112	132S [3]	132M
AC	123	138	156	176	176	194	218	257	257
AD	95	112	121	141	141	151	163	194	194
LB	205	231	260	283	313	345	383	439	499
LBZ	260	293	329	362	392	440	482	547	607
L [1]	479	505	534	557	587	619	657	713	773
LZ [1]	534	567	603	636	666	714	756	821	881
LD	103	103	103	136	136	136	136	190	190
R	86	86	86	106	106	106	106	148	148

165
83
278
FB14 88

[1] See also pages 90, 91
[2] For motors HB3-HB3Z 90S 2, HB3-HB3Z 90S 4, HB3-HB3Z 90S 6 dimensions as motor size 90L
[3] For motors HB3-HB3Z 132 SB 2, HB3-HB3Z 132SC 2, HB3-HB3Z 132S 4 dimensions as motor size 132M

For details about drive end **A** and **B** see page 41
* options on request
** both version with key

iO 673 SE

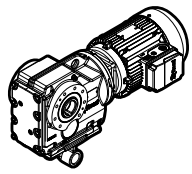

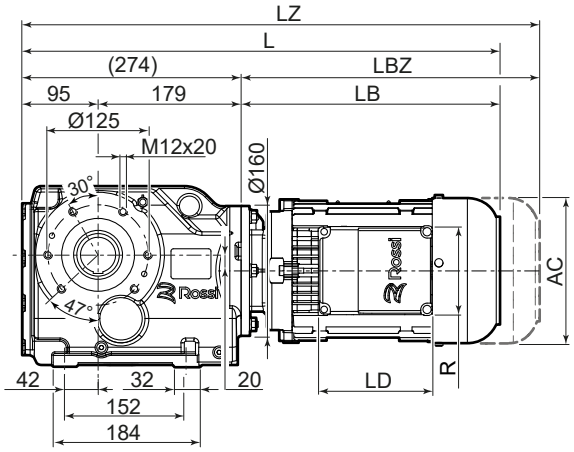

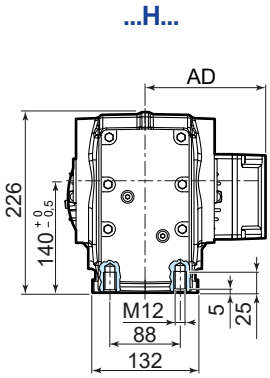

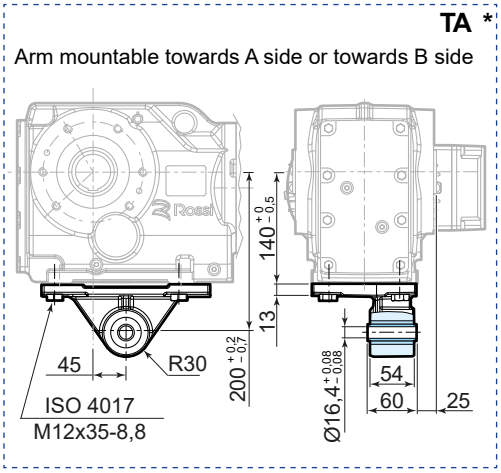

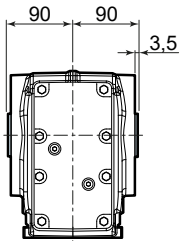

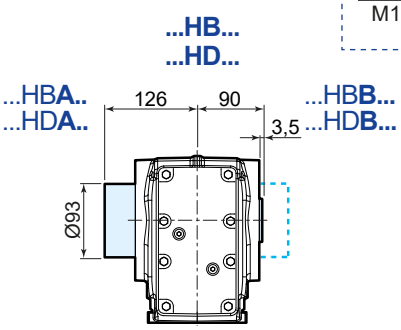

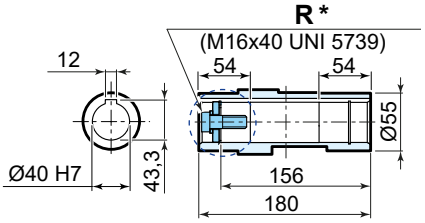

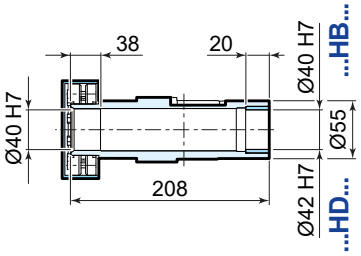

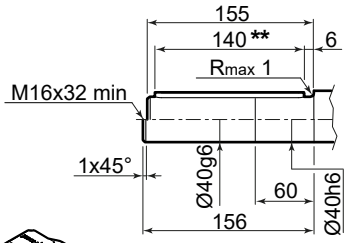

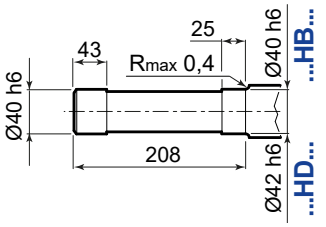

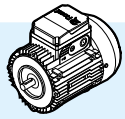

	63	71	80	90S [2]	90L	100	112	132S [3]	132M
AC	123	138	156	176	176	194	218	257	257
AD	95	112	121	141	141	151	163	194	194
LB	205	231	260	283	313	345	383	439	499
LBZ	260	293	329	362	392	440	482	547	607
L [1]	479	505	534	557	587	619	657	713	773
LZ [1]	534	567	603	636	666	714	756	821	881
LD	103	103	103	136	136	136	136	190	190
R	86	86	86	106	106	106	106	148	148

165
83
278

[1] See also pages 90, 91
[2] For motors HB3-HB3Z 90S 2, HB3-HB3Z 90S 4, HB3-HB3Z 90S 6 dimensions as motor size 90L
[3] For motors HB3-HB3Z 132 SB 2, HB3-HB3Z 132SC 2, HB3-HB3Z 132S 4 dimensions as motor size 132M

For details about drive end **A** and **B** see page 41
* options on request.
** both version with key

12.5

iO 773 PE

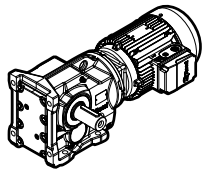

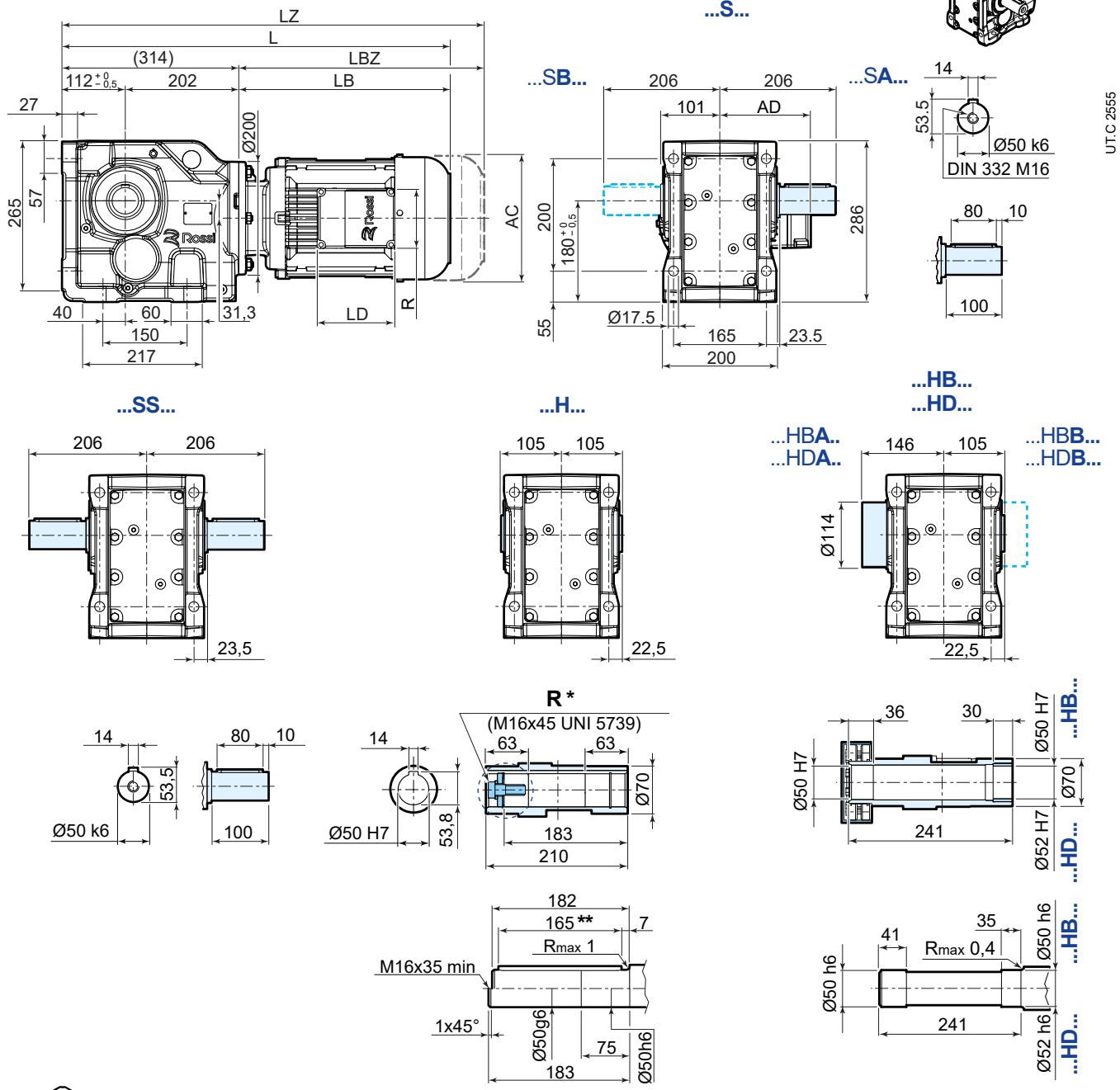

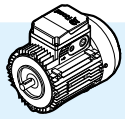

	63	71	80	90S [2]	90L	100	112	132S [3]	132M
AC	123	138	156	176	176	194	218	257	257
AD	95	112	121	141	141	151	163	194	194
LB	199	225	254	276	306	339	377	433	493
LBZ	254	287	323	355	385	434	476	541	601
L [1]	513	539	568	590	620	653	691	747	807
LZ [1]	568	601	637	669	699	748	790	855	915
LD	103	103	103	136	136	136	136	190	190
R	86	86	86	106	106	106	106	148	148

165
83
278

[1] See also pages 90, 91
[2] For motors HB3-HB3Z 90S 2, HB3-HB3Z 90S 4, HB3-HB3Z 90S 6 dimensions as motor size 90L
[3] For motors HB3-HB3Z 132 SB 2, HB3-HB3Z 132SC 2, HB3-HB3Z 132S 4 dimensions as motor size 132M

For details about drive end **A** and **B** see page 41
* options on request
** both version with key

iO 773 FE...F730

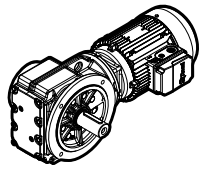

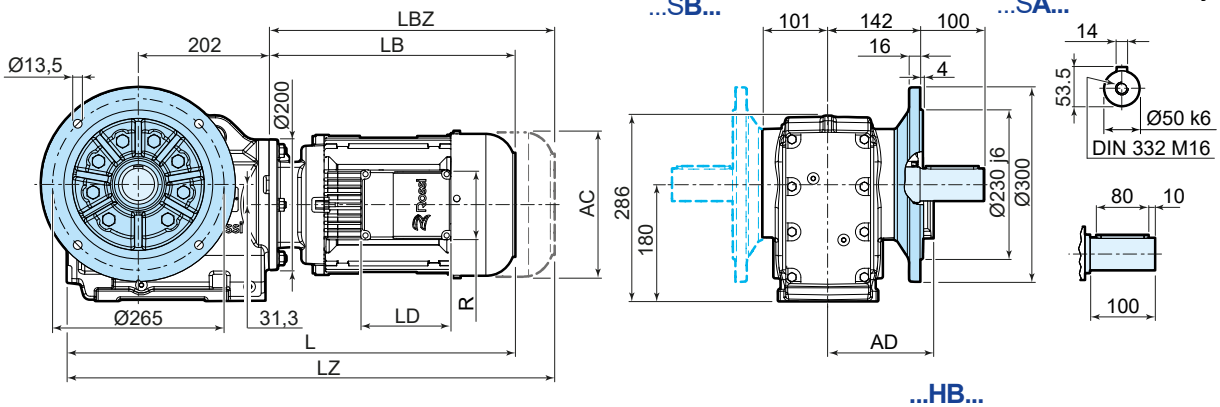

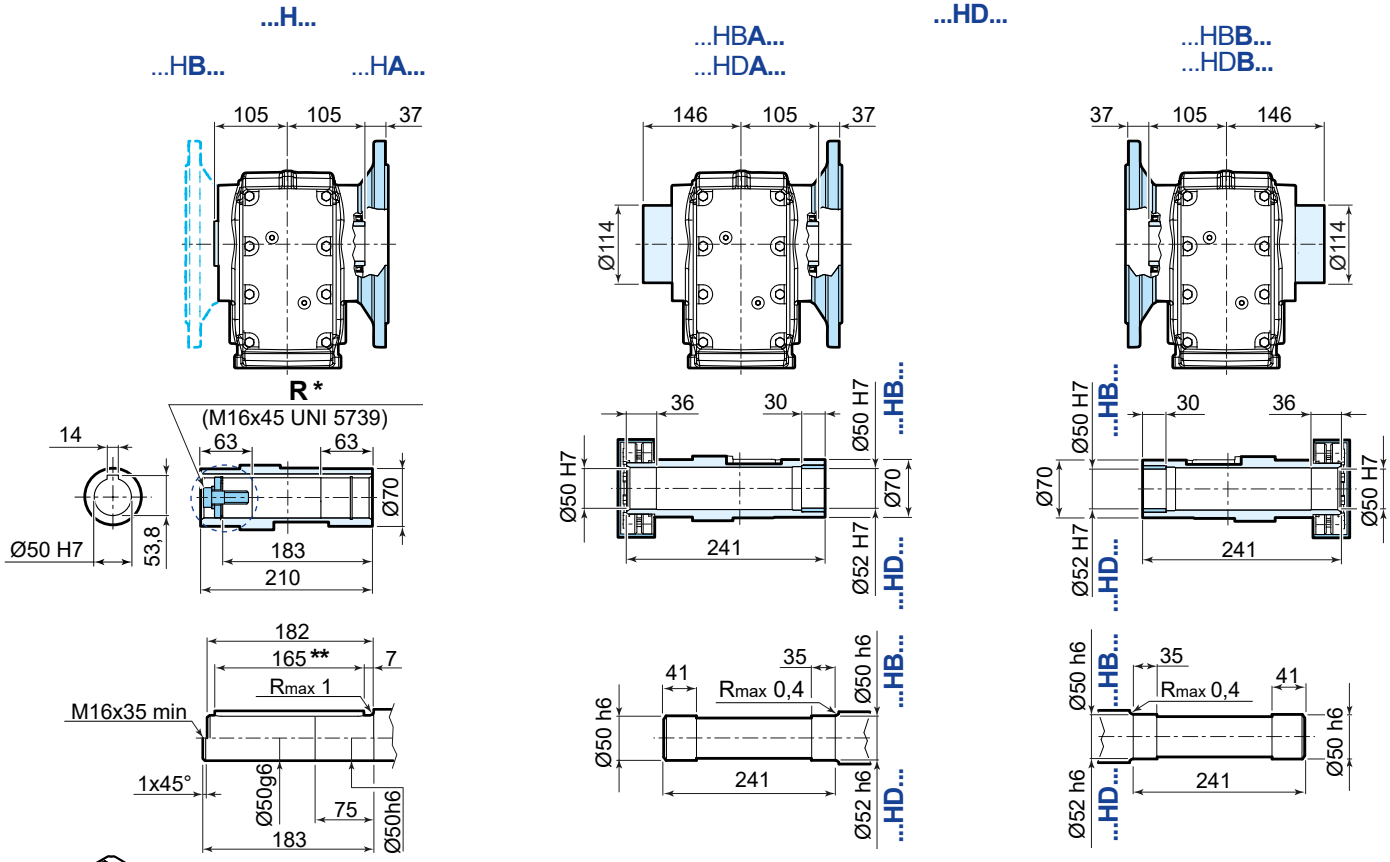

	63	71	80	90S [2]	90L	100	112	132S [3]	132M
AC	123	138	156	176	176	194	218	257	257
AD	95	112	121	141	141	151	163	194	194
LB	199	225	254	276	306	339	377	433	493
LBZ	254	287	323	355	385	434	476	541	601
L [1]	511	537	566	588	618	651	689	745	805
LZ [1]	566	599	635	667	697	746	788	853	913
LD	103	103	103	136	136	136	136	190	190
R	86	86	86	106	106	106	106	148	148

165
83
278
FB14 88

[1] See also pages 90, 91
[2] For motors HB3-HB3Z 90S 2, HB3-HB3Z 90S 4, HB3-HB3Z 90S 6 dimensions as motor size 90L
[3] For motors HB3-HB3Z 132 SB 2, HB3-HB3Z 132SC 2, HB3-HB3Z 132S 4 dimensions as motor size 132M

For details about drive end **A** and **B** see page 41
* options on request
** both version with key

iO 773 SE

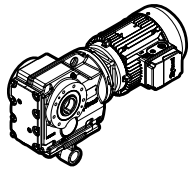

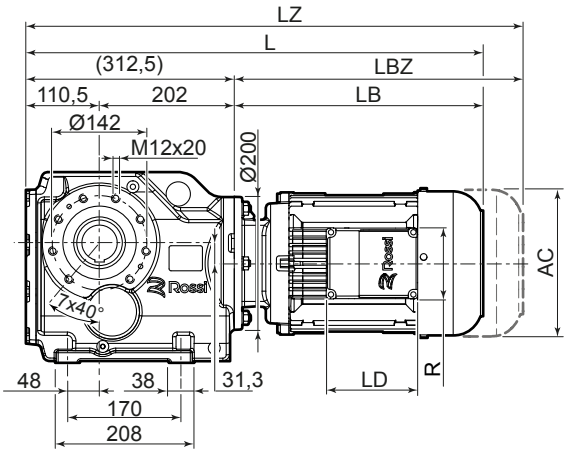

...H...

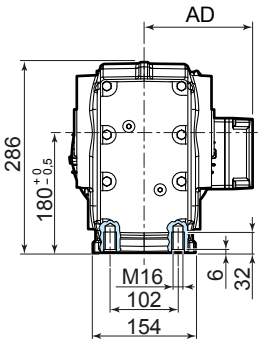

TA *

Arm mountable towards A side or towards B side

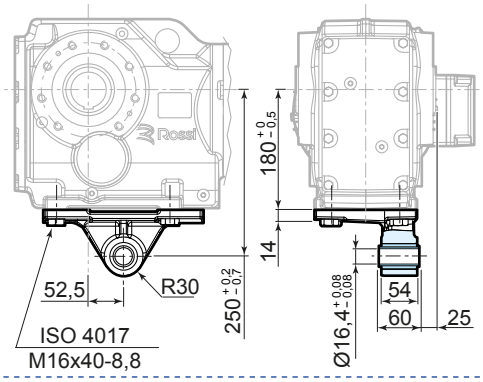

...HB...
...HD...

...H...

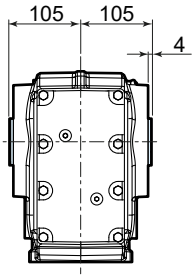

...HBA..
...HDA..

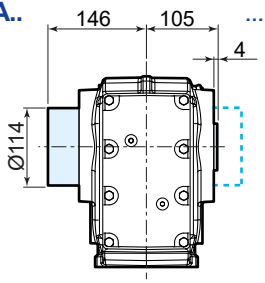

...HBB...
...HDB...

UT.C 2557

R *

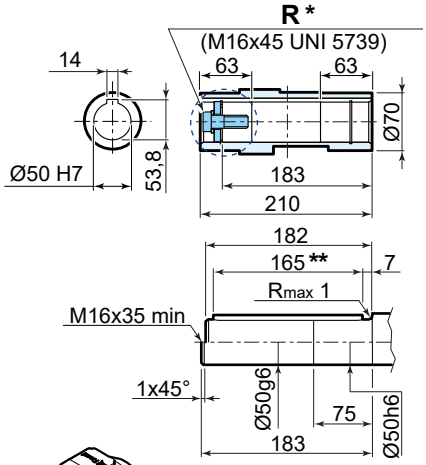

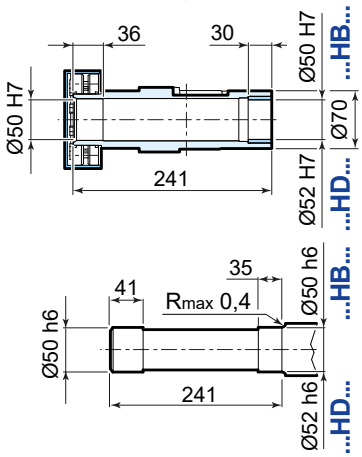

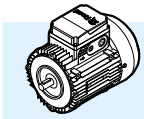

	63	71	80	90S [2]	90L	100	112	132S [3]	132M
AC	123	138	156	176	176	194	218	257	257
AD	95	112	121	141	141	151	163	194	194
LB	199	225	254	276	306	339	377	433	493
LBZ	254	287	323	355	385	434	476	541	601
L [1]	513	539	568	590	620	653	691	747	807
LZ [1]	568	601	637	669	699	748	790	855	915
LD	103	103	103	136	136	136	136	190	190
R	86	86	86	106	106	106	106	148	148

165
83
278

[1] See also pages 90, 91
[2] For motors HB3-HB3Z 90S 2, HB3-HB3Z 90S 4, HB3-HB3Z 90S 6 dimensions as motor size 90L
[3] For motors HB3-HB3Z 132 SB 2, HB3-HB3Z 132SC 2, HB3-HB3Z 132S 4 dimensions as motor size 132M

For details about drive end **A** and **B** see page 41
* options on request
** both version with key

12.6

iO 873 PE

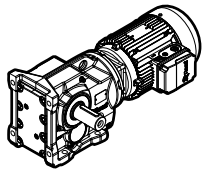

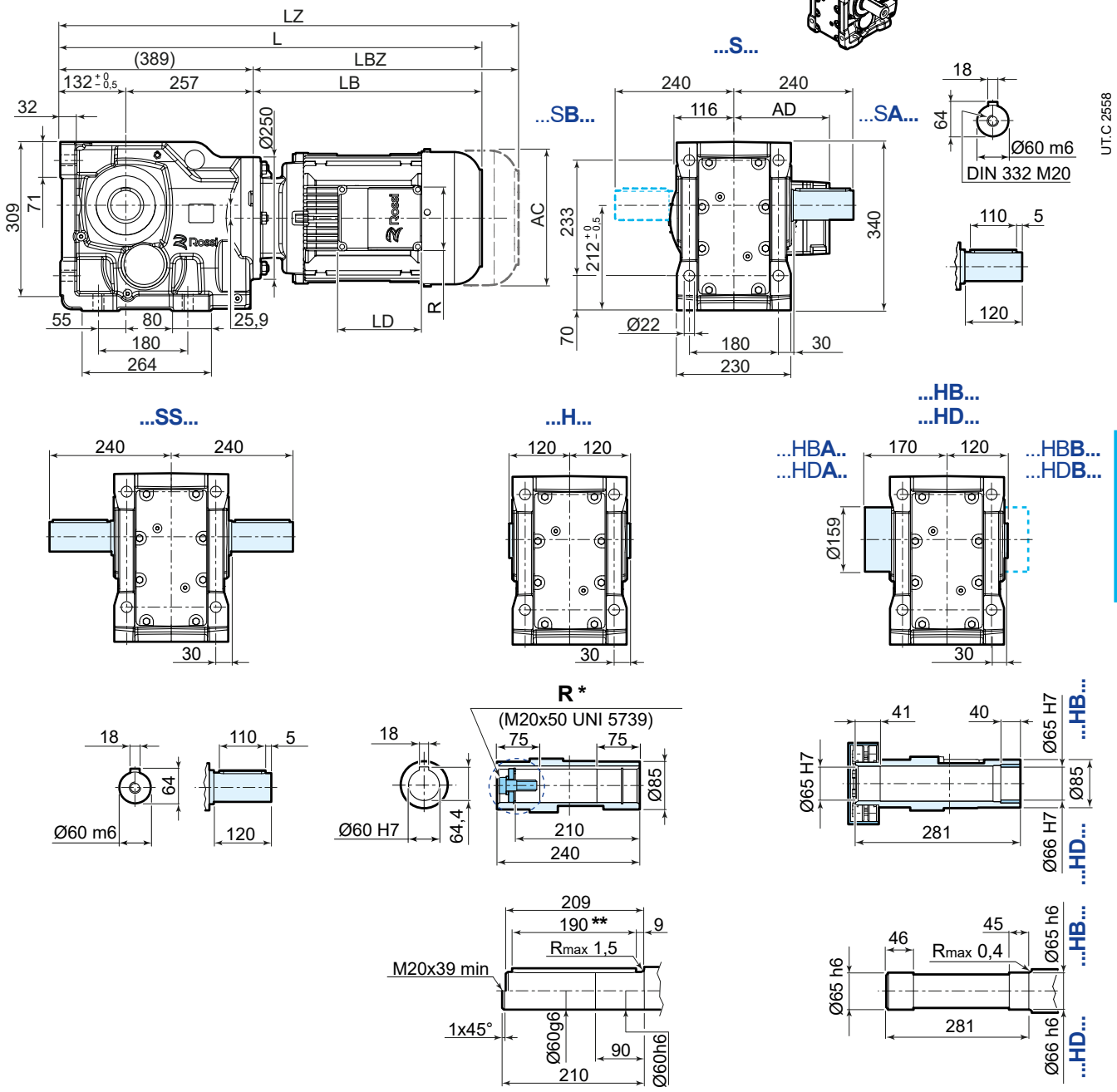

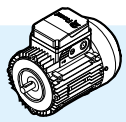

	80	90S [2]	90L	100	112	132S [3]	132M
AC	156	176	176	194	218	257	257
AD	121	141	141	151	163	194	194
LB	254	276	306	339	377	433	493
LBZ	323	355	385	434	476	541	601
L [1]	643	665	695	728	766	822	882
LZ [1]	712	744	774	823	865	930	990
LD	103	136	136	136	136	190	190
R	86	106	106	106	106	148	148

165

83

278

[1] See also pages 90, 91

[2] For motors HB3-HB3Z 90S 2, HB3-HB3Z 90S 4, HB3-HB3Z 90S 6 dimensions as motor size 90L

[3] For motors HB3-HB3Z 132 SB 2, HB3-HB3Z 132SC 2, HB3-HB3Z 132S 4 dimensions as motor size 132M

For details about drive end **A** and **B** see page 41

* options on request

** both version with key

iO 873 FE...F835

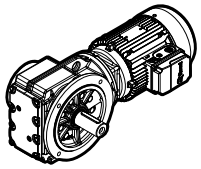

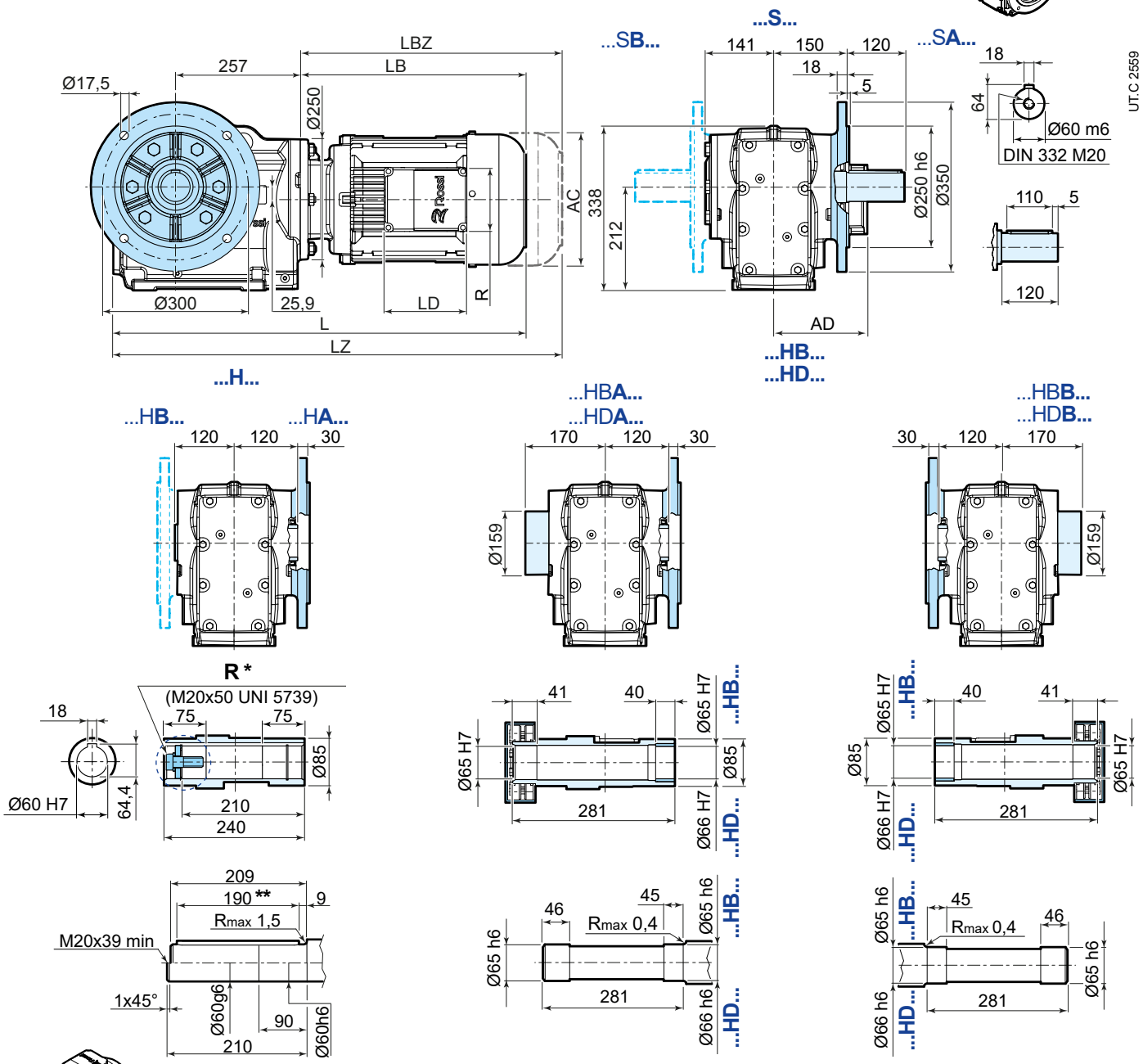

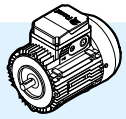

	80	90S [2]	90L	100	112	132S [3]	132M
AC	156	176	176	194	218	257	257
AD	121	141	141	151	163	194	194
LB	254	276	306	339	377	433	493
LBZ	323	355	385	434	476	541	601
L [1]	641	663	693	726	764	820	880
LZ [1]	710	742	772	821	863	928	988
LD	103	136	136	136	136	190	190
R	86	106	106	106	106	148	148

165
83
278
FB14
88

[1] See also pages 90, 91
[2] For motors HB3-HB3Z 90S 2, HB3-HB3Z 90S 4, HB3-HB3Z 90S 6 dimensions as motor size 90L
[3] For motors HB3-HB3Z 132 SB 2, HB3-HB3Z 132SC 2, HB3-HB3Z 132S 4 dimensions as motor size 132M

For details about drive end **A** and **B** see page 41
* options on request
** both version with key

iO 873 SE

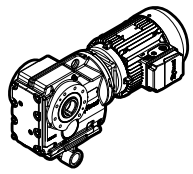

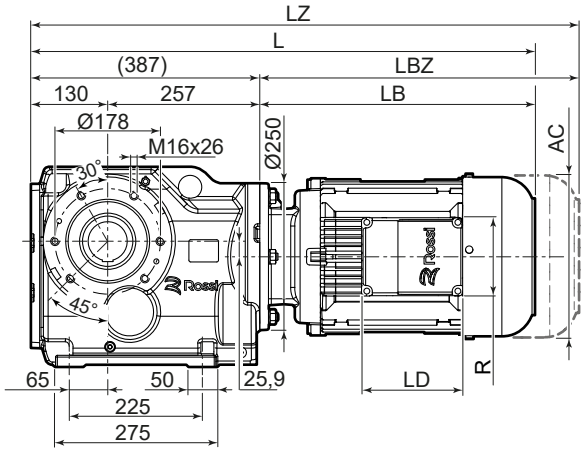

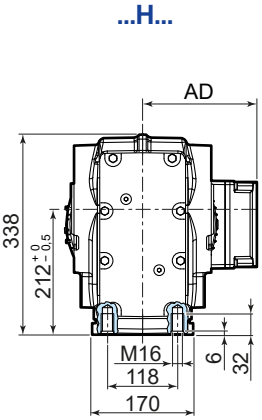

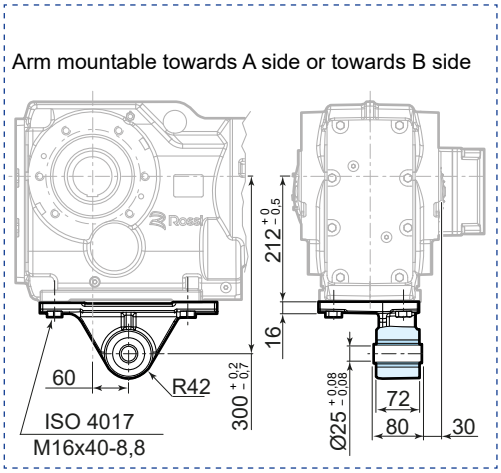

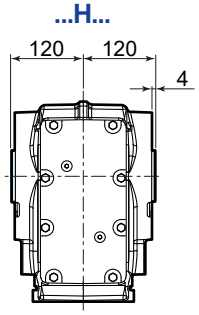

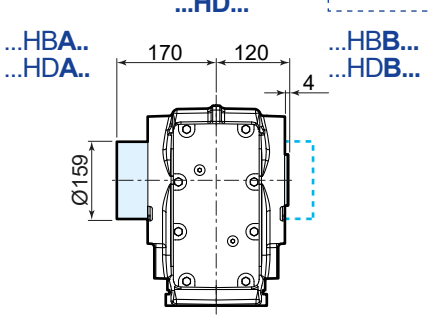

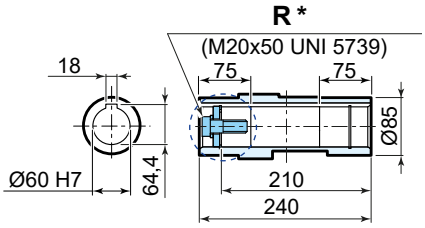

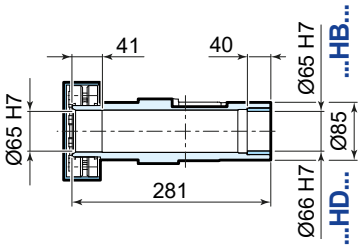

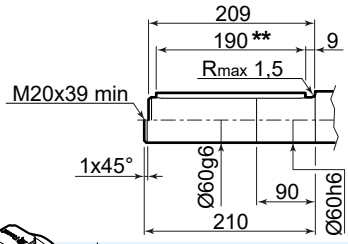

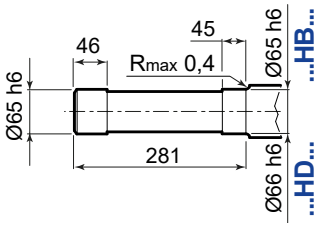

	80	90S [2]	90L	100	112	132S [3]	132M
AC	156	176	176	194	218	257	257
AD	121	141	141	151	163	194	194
LB	254	276	306	339	377	433	493
LBZ	323	355	385	434	476	541	601
L [1]	641	663	693	726	764	820	880
LZ [1]	710	742	772	821	863	928	988
LD	103	136	136	136	136	190	190
R	86	106	106	106	106	148	148

165
83
278

[1] See also pages 90, 91
[2] For motors HB3-HB3Z 90S 2, HB3-HB3Z 90S 4, HB3-HB3Z 90S 6 dimensions as motor size 90L
[3] For motors HB3-HB3Z 132 SB 2, HB3-HB3Z 132SC 2, HB3-HB3Z 132S 4 dimensions as motor size 132M

For details about drive end **A** and **B** see page 41
* options on request
** both version with key

12.7

iO 973 PE

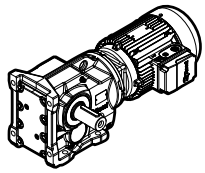

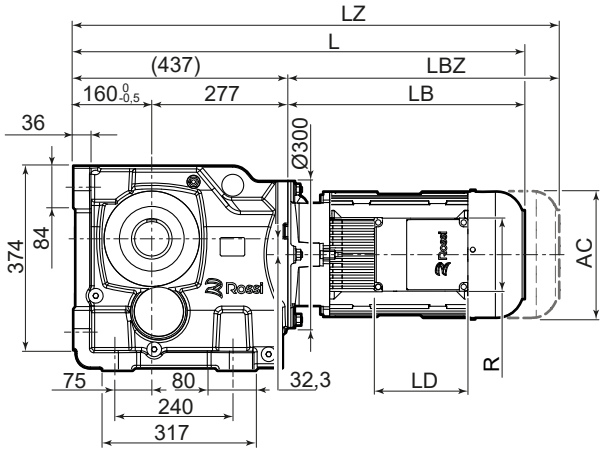

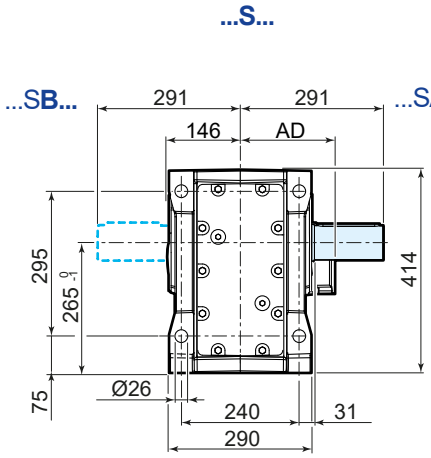

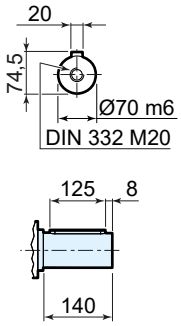

UT.C 2561

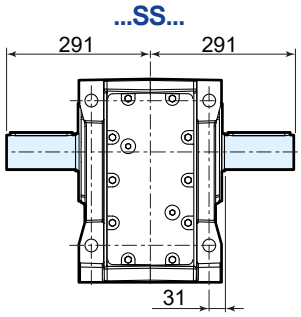

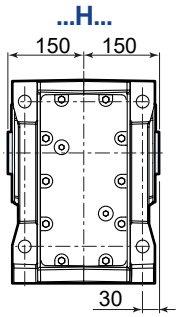

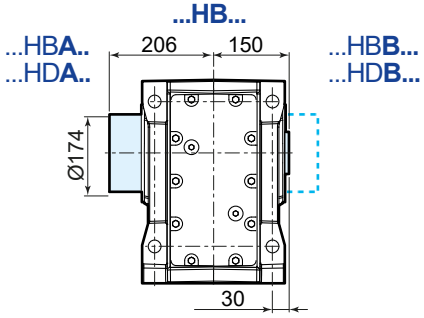

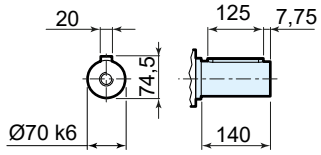

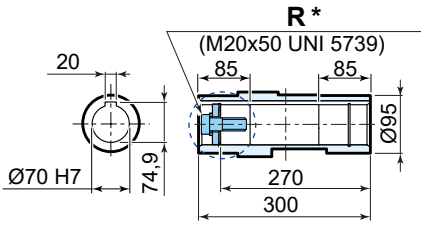

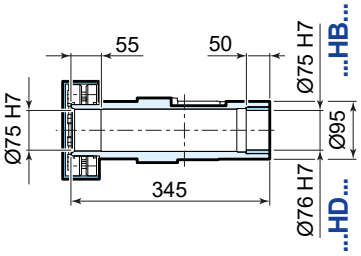

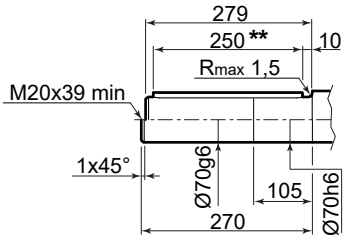

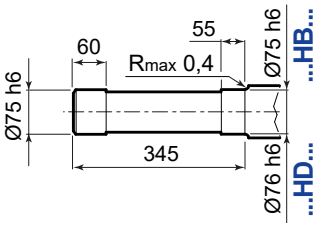

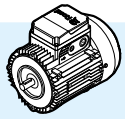

	80	90S [2]	90L	100	112	132S [3]	132M
AC	156	176	176	194	218	257	257
AD	121	141	141	151	163	194	194
LB	254	276	306	339	377	433	493
LBZ	323	355	385	434	476	541	601
L [1]	691	713	743	776	814	870	930
LZ [1]	760	792	822	871	913	978	1038
LD	103	136	136	136	136	190	190
R	86	106	106	106	106	148	148

165
83
278

[1] See also pages 90, 91
[2] For motors HB3-HB3Z 90S 2, HB3-HB3Z 90S 4, HB3-HB3Z 90S 6 dimensions as motor size 90L
[3] For motors HB3-HB3Z 132 SB 2, HB3-HB3Z 132SC 2, HB3-HB3Z 132S 4 dimensions as motor size 132M

For details about drive end **A** and **B** see page 41
* options on request
** both version with key

iO 973 FE...F945

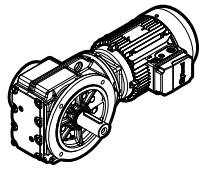

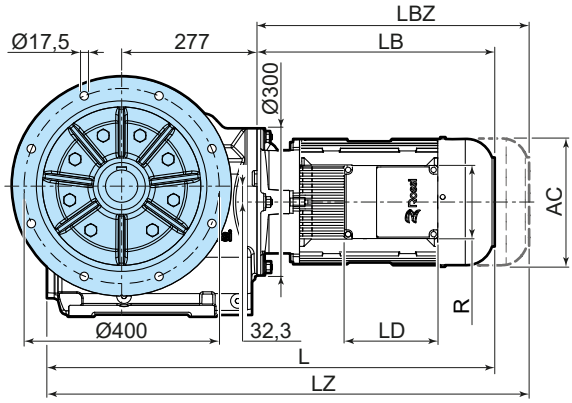

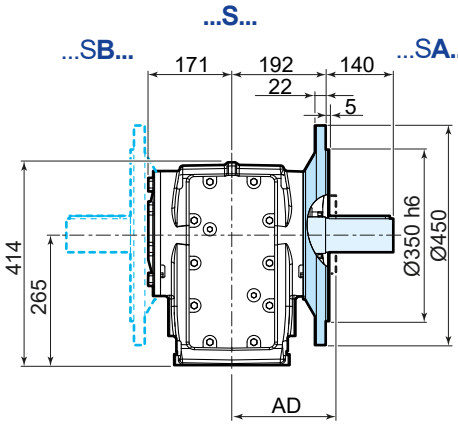

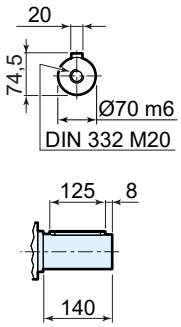

UT.C 2562

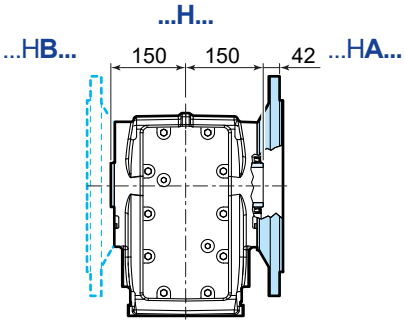

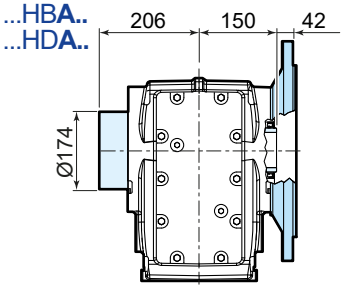

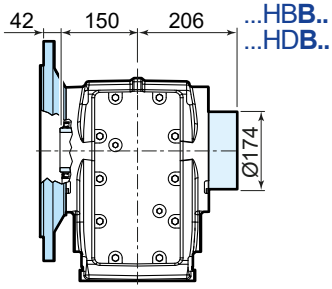

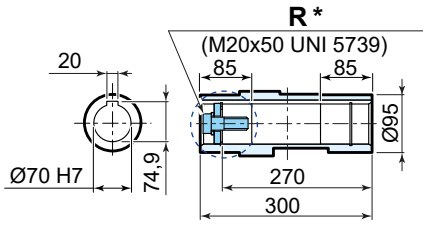

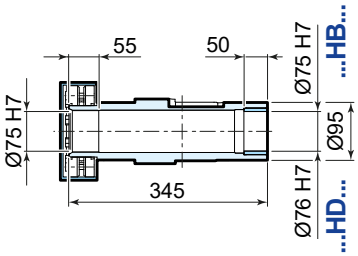

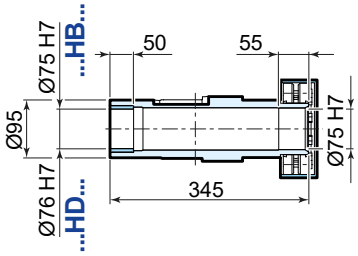

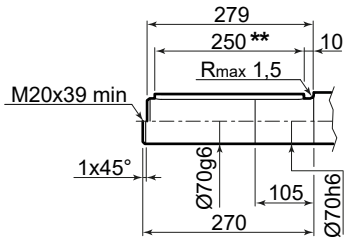

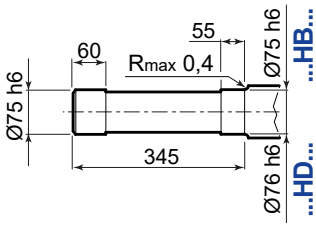

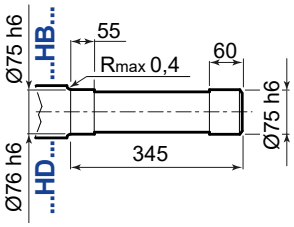

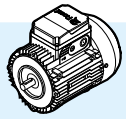

	80	90S [2]	90L	100	112	132S [3]	132M
AC	156	176	176	194	218	257	257
AD	121	141	141	151	163	194	194
LB	254	276	306	339	377	433	493
LBZ	323	355	385	434	476	541	601
L [1]	684	706	736	769	807	863	923
LZ [1]	753	785	815	864	906	971	1031
LD	103	136	136	136	136	190	190
R	86	106	106	106	106	148	148

165
83
278
88

[1] See also pages 90, 91
[2] For motors HB3-HB3Z 90S 2, HB3-HB3Z 90S 4, HB3-HB3Z 90S 6 dimensions as motor size 90L
[3] For motors HB3-HB3Z 132 SB 2, HB3-HB3Z 132SC 2, HB3-HB3Z 132S 4 dimensions as motor size 132M

For details about drive end **A** and **B** see page 41
* options on request
** both version with key

iO 973 SE

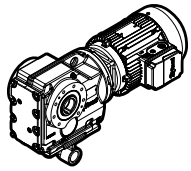

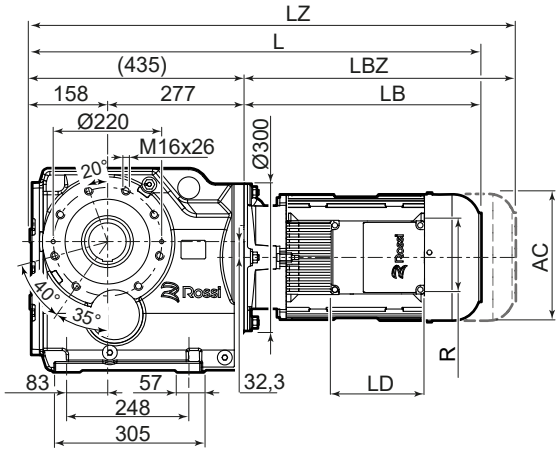

...H...

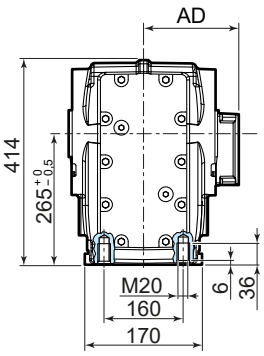

TA *

Arm mountable towards A side or towards B side

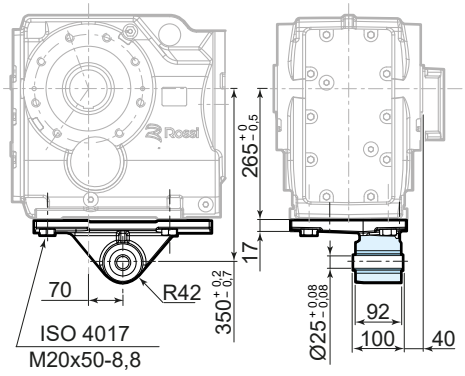

...H...

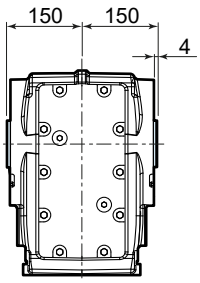

...HB...

...HB**A**..
...HD**A**..

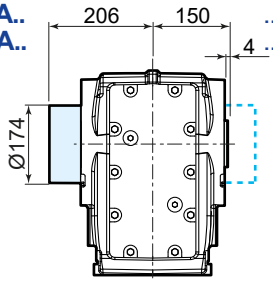

...HB**B**...
...HD**B**...

UT.C 2563

R *

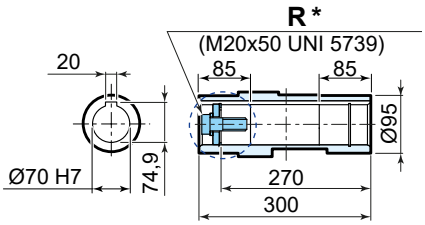

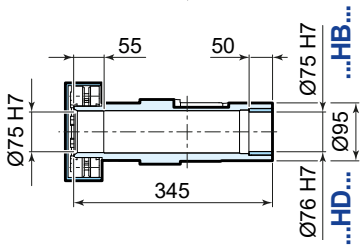

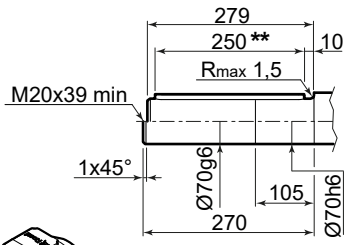

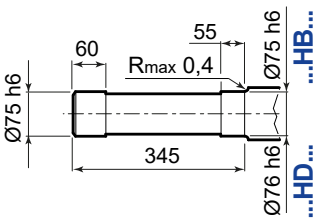

	80	90S [2]	90L	100	112	132S [3]	132M
AC	156	176	176	194	218	257	257
AD	121	141	141	151	163	194	194
LB	254	276	306	339	377	433	493
LBZ	323	355	385	434	476	541	601
L [1]	689	711	741	774	812	868	928
LZ [1]	758	790	820	869	911	976	1036
LD	103	136	136	136	136	190	190
R	86	106	106	106	106	148	148

165
83
278
FB14 88

[1] See also pages 90, 91
[2] For motors HB3-HB3Z 90S 2, HB3-HB3Z 90S 4, HB3-HB3Z 90S 6 dimensions as motor size 90L
[3] For motors HB3-HB3Z 132 SB 2, HB3-HB3Z 132SC 2, HB3-HB3Z 132S 4 dimensions as motor size 132M

For details about drive end **A** and **B** see page 41
* options on request
** both version with key

page intentionally left blank

13

Parallel shaft helical Selection tables - iP

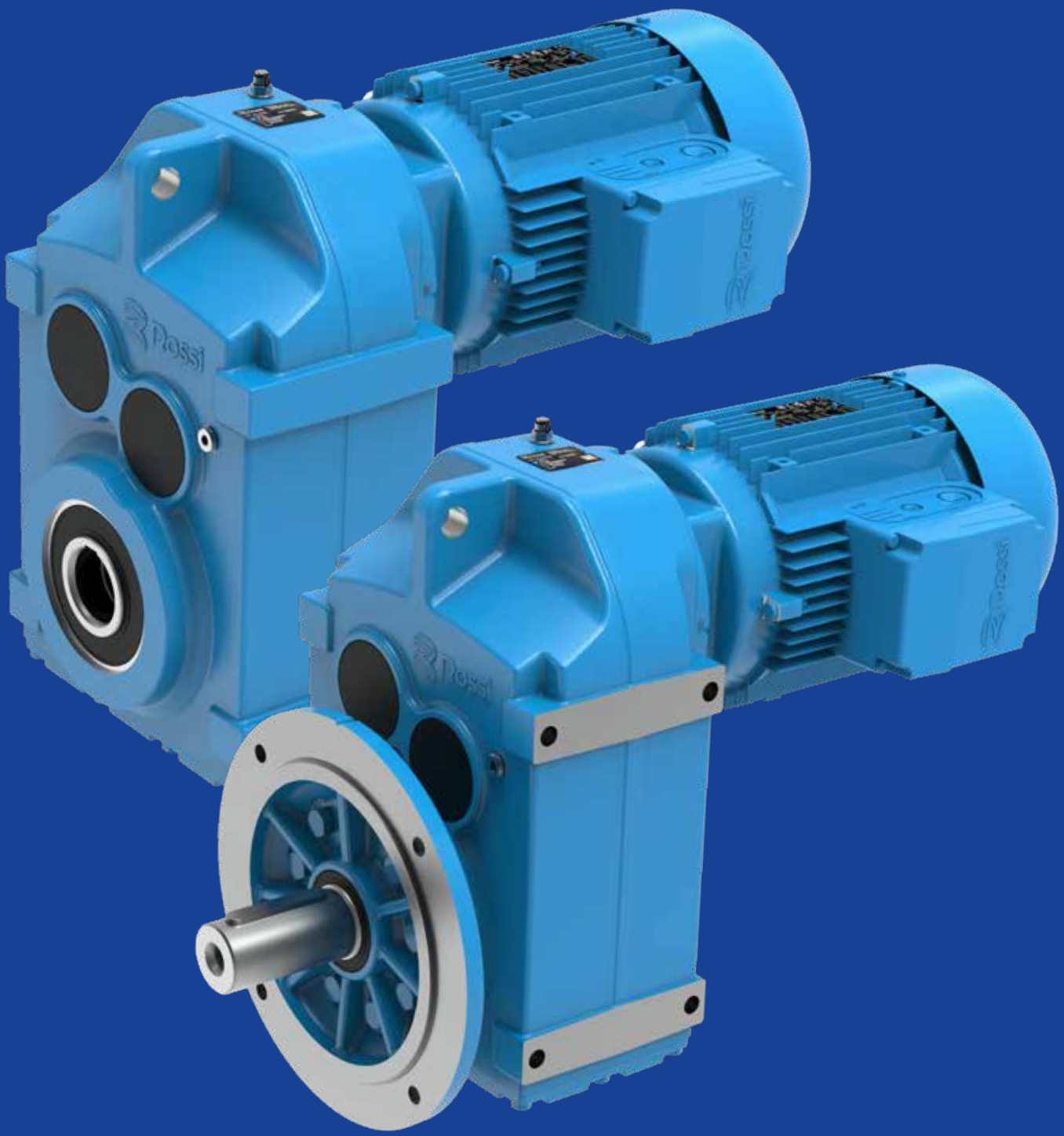

Section contents

9.1	Possible geometrical combinations	222
9.1.1	General	222
9.1.2	Key	222
9.2	Geometrical coupling tables	223
9.3	Selection tables [kW]	231

13.1

Possible geometrical combinations

13.1.1 General

The tables in the following pages show the geometrical coupling possibilities with HB 4 poles motors, according to train of gears (2 or 3 stages) and transmission ratio.
Also the low speed shaft rotation speed n_2, calculated according to a nominal input speed equal to n_1 = 1400 min^{-1}, are shown.
The values of the nominal torque at the low speed shaft M_{N2} and of the permissible radial load F_{r2} acting on the center line are also referred to this speed.

At the time of selection, it is necessary to evaluate the actual operating conditions in relation to the actual power of the applied motor as indicated in ch. 6.

13.1.2 Key

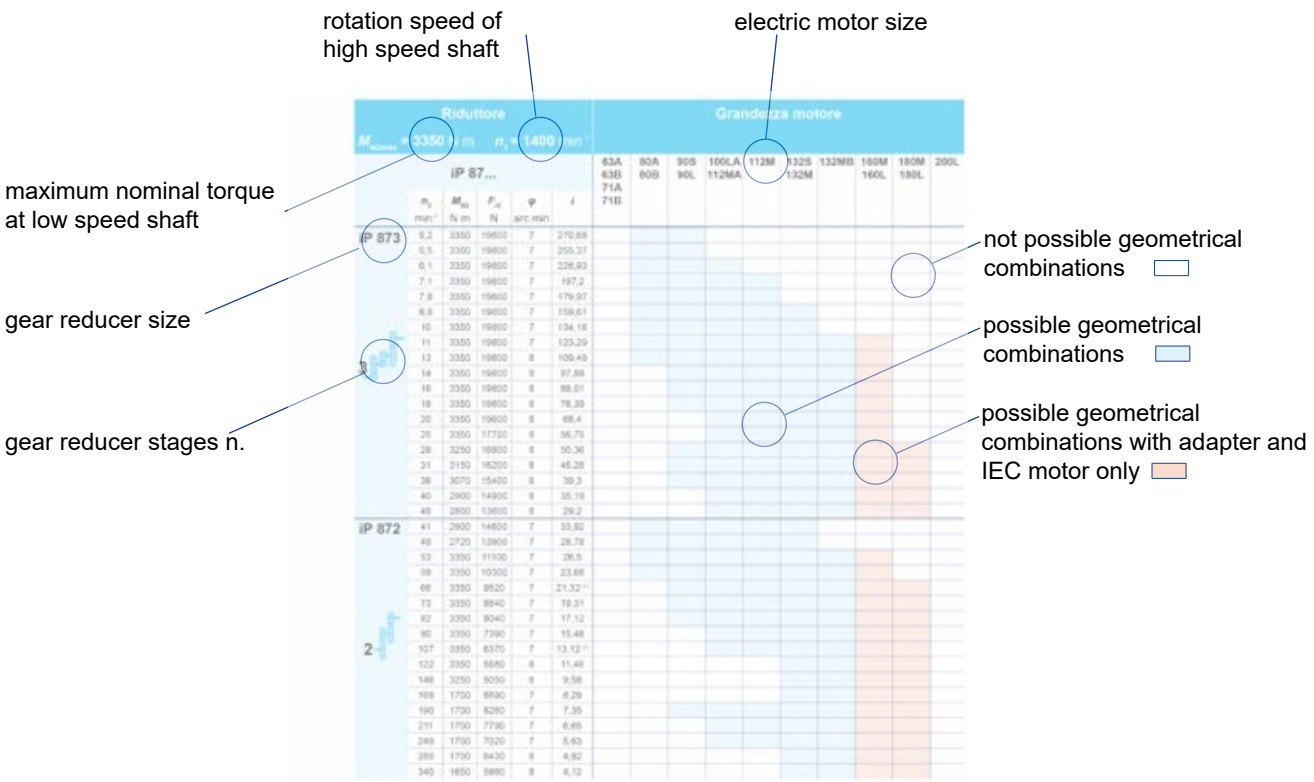

where

- n_2 low speed shaft rotation speed
- M_{N2} nominal torque at low speed shaft
- F_{r2} permissible radial load acting on center line of low speed shaft
  (at speed n_2 and with torque M_{N2} indicated in the table - valid only for foot mounted gearmotor design)
- φ reduced backlash, referred to low speed shaft
  (tolerance ± 2 arc min - if value is not specified, the reduced backlash option is not available)
- i transmission ratio

Gear reducer M_{N2max} = 145 N m n_1 = 1400 min^{-1}						Motor size									
iP 27...	n_2 min^{-1}	M_{N2} N m	F_{r2} N	φ arc min	i	63A 63B 71A 71B	80A 80B	90S 90L	100LA 112MA	112M	132S 132M	132MB	160M 160L	180M 180L	200L
iP 273	9,9	145	4500	-	140,74										
	11	145	4500	-	129,09										
	13	145	4500	-	109,9										
	15	145	4500	-	94,76										
	16	145	4500	-	88,32										
	18	145	4500	-	77,21										
	19	145	4500	-	72,37										
	22	145	4400	-	63,86										
3	25	145	4180	-	56,62										
	28	145	3980	-	50,19										
	30	145	3860	-	46,78										
	34	145	3640	-	40,89										
	37	145	3530	-	38,33										
	41	145	3340	-	33,83										
iP 272	47	145	3140	-	29,56										
	52	145	3030	-	27,18										
	60	145	2820	-	23,25										
	69	145	2630	-	20,15										
	74	145	2550	-	18,84										
	86	145	2370	-	16,28										
	101	145	2180	-	13,84										
	113	145	2060	-	12,35										
	133	145	1900	-	10,55										
2	142	145	1830	-	9,88										
	149	140	1660	-	9,4										
	172	132	1580	-	8,13										
	203	122	1530	-	6,91										
	227	115	1480	-	6,17										
	266	109	1440	-	5,27										
	284	103	1420	-	4,93										
	337	95	1380	-	4,16										

Gear reducer M_{N2max} = 224 N m n_1 = 1400 min^{-1}						Motor size									
iP 37...	n_2 min^{-1}	M_{N2} N m	F_{r2} N	φ arc min	i	63A 63B 71A 71B	80A 80B	90S 90L	100LA 112MA	112M	132S 132M	132MB	160M 160L	180M 180L	200L
iP 373	11	224	4290	7	128,51										
	12	224	4290	7	117,88										
	14	224	4290	7	100,36										
	16	224	4290	7	86,53										
	17	224	4290	7	80,65										
	20	224	4290	7	70,5										
	21	224	4290	7	66,09										
	24	224	4290	7	58,32										
3	26	224	4290	8	54,54										
	27	224	4290	7	51,7										
	30	224	4290	8	47,02										
	32	224	4290	8	43,83										
	37	224	4290	8	38,31										
	39	224	4290	8	35,91										
	44	224	4290	8	31,69										
	50	224	4060	8	28,09										
	59	224	3760	8	23,88										
iP 372	59	224	3740	7	23,63										
	68	224	3500	7	20,57										
	73	224	3390	7	19,27										
	82	224	3180	7	17,03										
	89	224	3070	7	15,81										
	98	224	2910	7	14,33										
	109	224	2750	7	12,87										
	126	212	2620	7	11,08										
	134	206	2580	7	10,42										
2	156	195	2460	7	8,97										
	175	190	2360	8	8,01										
	188	160	2350	10	7,44										
	208	155	2270	10	6,74										
	231	145	2190	11	6,05										
	269	136	2120	11	5,21										
	286	132	2100	11	4,9										
	332	122	2030	11	4,22										
	371	115	1970	12	3,77										

Gear reducer M_{N2max} = 450 N m n_1 = 1400 min^{-1}						Motor size									
iP 47...	n_2 min^{-1}	M_{N2} N m	F_{r2} N	φ arc min	i	63A 63B 71A 71B	80A 80B	90S 90L	100LA 112MA	112M	132S 132M	132MB	160M 160L	180M 180L	200L
iP 473	7,3	450	5920	7	190,76										
	8	450	5920	7	175,38										
	9,3	450	5920	7	150,06										
	11	450	5920	7	130,07										
	12	450	5920	7	121,57										
	13	450	5920	7	105,09										
	16	450	5920	7	89,29										
	18	450	5920	7	79,72										
3	21	450	5920	7	68,09										
	21	450	5920	7	65,36										
	25	450	5920	7	56,49										
	29	450	5920	7	48 (1)										
	33	450	5920	7	42,86										
	38	450	5920	7	36,61										
	41	450	5920	7	34,29										
	48	450	5790	7	28,88										
iP 472	45	450	5920	6	30,86										
	48	450	5830	6	29,32										
	54	450	5460	6	25,72										
	64	450	5030	6	21,82										
	71	450	4770	6	19,7										
	81	450	4450	6	17,33										
	86	450	4320	6	16,36										
	101	450	3950	7	13,93										
2	111	450	3740	7	12,66										
	128	450	3440	7	10,97										
	156	365	3250	8	8,96										
	178	425	2630	9	7,88										
	188	425	2530	9	7,44 (1)										
	221	387	2470	9	6,34										
	243	375	2390	9	5,76										
	281	355	2310	10	4,99										

(1) Finite transmission ratio *i*

Gear reducer M_{N2max} = 670 N m n_1 = 1400 min^{-1}						Motor size									
iP 57...	n_2 min^{-1}	M_{N2} N m	F_{r2} N	φ arc min	i	63A 63B 71A 71B	80A 80B	90S 90L	100LA 112MA	112M	132S 132M	132MB	160M 160L	180M 180L	200L
iP 573	7	670	9200	6	199,7										
	7,6	670	9200	7	183,6										
	8,9	670	9200	7	157,09										
	10	650	9200	7	136,16										
	11	650	9200	7	127,27										
	13	650	9200	7	110,01										
	15	650	9200	7	93,47										
	17	630	9200	7	83,46										
3 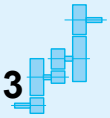	19	630	9200	7	72,98										
	21	630	9200	7	68,22										
	24	630	9200	7	58,97										
	28	630	9200	7	50,1										
	31	630	9160	7	44,73										
	37	630	8510	7	38,21										
	39	615	8250	7	35,79										
	46	600	7650	7	30,15										
iP 572	35	325	10500	6	40,13										
	41	515	8670	6	34,24										
	47	580	7890	6	29,94										
	49	560	7760	6	28,45										
	56	615	7060	6	24,96										
	66	615	6350	6	21,17										
	73	615	6020	6	19,11										
	83	600	5620	6	16,81										
	88	600	5450	6	15,88										
2	104	600	4980	7	13,52										
	114	600	4710	7	12,29										
	132	600	4320	7	10,64										
	150	437	4760	8	9,31										
	171	450	4450	8	8,19										
	181	462	4310	8	7,73										
	213	475	3940	8	6,58										
	234	462	3730	9	5,98										
	270	462	3460	9	5,18										

Gear reducer M_{N2max} = 925 N m n_1 = 1400 min^{-1}						Motor size									
iP 67...	n_2 min^{-1}	M_{N2} N m	F_{r2} N	φ arc min	i	63A 63B 71A 71B	80A 80B	90S 90L	100LA 112MA	112M	132S 132M	132MB	160M 160L	180M 180L	200L
iP 673	6,1	925	10300	6	228,99										
	7,2	925	10300	6	195,39										
	8,2	900	10300	6	170,85										
	8,6	875	10300	6	162,31										
	9,8	875	10300	6	142,4										
	12	875	10300	6	120,79										
	13	850	10300	6	109,04										
	15	850	10300	6	95,94										
	15	850	10300	6	90,59										
3 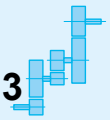	18	850	10300	7	79,76										
	21	850	10300	7	67,65										
	23	850	10300	7	61,07										
	26	850	10300	7	53,73										
	28	850	10300	7	50,74										
	32	850	10300	7	43,2										
	36	825	10700	7	39,26										
	41	825	11000	7	34,01										
iP 672	39	825	10300	6	36,3										
	44	825	10300	6	32,08										
	51	825	10300	6	27,41										
	56	825	10300	6	25,13										
	63	825	10300	6	22,05										
	67	825	10300	6	20,9 (1)										
	77	825	10300	6	18,29										
	85	825	10300	6	16,48										
	97	825	10300	6	14,46										
	110	825	10300	6	12,76										
2	124	825	10300	6	11,31										
	145	825	10300	7	9,66										
	154	600	11400	8	9,08										
	163	630	10900	9	8,6										
	186	690	10100	9	7,53										
	206	690	9660	9	6,78										
	235	690	9200	9	5,95										
	267	670	8850	9	5,25										
	300	630	8590	10	4,66										
	353	560	8390	10	3,97										

(1) Finite transmission ratio i

iP

Gear reducer M_{N2max} = 1700 N m n_1 = 1400 min^{-1}						Motor size									
iP 77...	n_2 min^{-1}	M_{N2} N m	F_{r2} N	φ arc min	i	63A 63B 71A 71B	80A 80B	90S 90L	100LA 112MA	112M	132S 132M	132MB	160M 160L	180M 180L	200L
iP 773	5	1700	15700	6	281,71										
	5,3	1700	15700	6	262,93										
	6,2	1700	15700	6	225,79										
	7,1	1700	15700	6	198,31										
	7,4	1700	15700	6	188,4										
	8,4	1700	15700	6	166,47										
	9,8	1700	15700	6	142,27										
	11	1700	15700	6	130,42										
	12	1700	15700	6	114,45										
	13	1700	15700	6	108,46 (1)										
3	15	1700	15700	6	94,93										
	16	1700	15700	6	85,52										
	19	1700	15700	6	75,02										
	19	1700	15700	6	72,5										
	21	1700	15700	6	66,46										
	24	1700	15700	6	58,32										
	25	1700	15700	6	55,27										
	29	1700	15700	6	48,37										
	32	1700	15700	7	43,58										
	37	1700	15700	6	38,23										
	41	1650	15700	7	33,74										
	47	1600	15700	7	29,91										
	55	1500	16100	7	25,54										
iP 772	38	1250	17900	5	36,58										
	44	1550	16500	5	31,51										
	49	1600	16200	5	28,75										
	55	1700	15700	5	25,5 (1)										
	65	1700	15700	5	21,43										
	71	1700	15700	6	19,7										
	80	1700	15700	6	17,49										
	90	1700	15700	6	15,64 (1)										
	100	1700	15700	6	14,06										
2	115	1700	14900	6	12,2										
	128	1700	14200	6	10,93										
	151	1220	13800	8	9,3										
	169	1220	13100	8	8,26										
	189	1220	12500	8	7,39										
	211	1220	12000	8	6,64										
	243	1220	11300	8	5,76										
	271	1220	10700	8	5,16										
	327	1090	10200	9	4,28										

(1) Finite transmission ratio i

Gear reducer M_{N2max} = 3350 N m n_1 = 1400 min^{-1}						Motor size									
iP 87...	n_2 min^{-1}	M_{N2} N m	F_{r2} N	φ arc min	i	63A 63B 71A 71B	80A 80B	90S 90L	100LA 112MA	112M	132S 132M	132MB	160M 160L	180M 180L	200L
iP 873	5,2	3350	19800	7	270,68										
	5,5	3350	19800	7	255,37										
	6,1	3350	19800	7	228,93										
	7,1	3350	19800	7	197,2										
	7,8	3350	19800	7	179,97										
	8,8	3350	19800	7	159,61										
	10	3350	19800	7	134,16										
	11	3350	19800	7	123,29										
	13	3350	19800	8	109,49										
3	14	3350	19800	8	97,89										
	16	3350	19800	8	88,01										
	18	3350	19800	8	76,39										
	20	3350	19600	8	68,4										
	25	3350	17700	8	56,75										
	28	3250	16800	8	50,36										
	31	3150	16200	8	45,28										
	36	3070	15400	8	39,3										
	40	2900	14900	8	35,19										
	48	2800	13800	8	29,2										
iP 872	41	2900	14600	7	33,92										
	49	2720	13900	7	28,78										
	53	3350	11100	7	26,5										
	59	3350	10300	7	23,68										
	66	3350	9520	7	21,32 (1)										
	73	3350	8840	7	19,31										
	82	3350	8040	7	17,12										
	90	3350	7390	7	15,48										
2	107	3350	6370	7	13,12 (1)										
	122	3350	5580	8	11,46										
	146	3250	5050	8	9,58										
	169	1700	8890	7	8,29										
	190	1700	8280	7	7,35										
	211	1700	7790	7	6,65										
	249	1700	7020	7	5,63										
	285	1700	6430	8	4,92										
	340	1650	5980	8	4,12										

(1) Finite transmission ratio *i*

iP

Gear reducer M_{N2max} = 4870 N m n_1 = 1400 min^{-1}						Motor size									
iP 97...	n_2 min^{-1}	M_{N2} N m	F_{r2} N	φ arc min	i	63A 63B 71A 71B	80A 80B	90S 90L	100LA 112MA	112M	132S 132M	132MB	160M 160L	180M 180L	200L
iP 973	5,1	4870	29900	6	276,77										
	5,5	4870	29900	6	253,41										
	6,3	4870	29900	6	223,88										
	7,4	4870	29900	6	189,92										
	8	4870	29900	6	174,87										
	9	4870	29900	6	156,3										
	9,9	4870	29900	6	140,71										
	11	4870	29900	6	127,42										
	12	4870	29900	6	112,99										
	14	4870	29900	6	102,16										
3	14	4870	29900	7	97,58										
	16	4870	29900	7	89,85										
	16	4870	29900	6	86,59										
	17	4870	29900	7	80,31										
	19	4750	29900	6	75,63										
	19	4750	29900	7	72,29										
	21	4750	29000	7	65,47										
	24	4750	27200	7	58,06										
	27	4750	25800	7	52,49										
	31	4750	23600	7	44,49										
	36	4750	21900	7	38,86										
	43	4620	19800	7	32,5										
iP 972	32	3450	27600	6	43,28										
	38	3450	25500	6	36,64										
	41	4750	20300	6	33,91										
	46	4620	19000	6	30,39										
	51	4620	17900	6	27,44 (1)										
	56	4620	16800	6	24,92										
	63	4620	15600	6	22,11										
	70	4620	14600	6	20,07										
	81	4620	13200	6	17,25 (1)										
2	93	4620	11900	6	15,06										
	110	4500	10500	6	12,77										
	125	4500	10000	6	11,16										
	155	2650	13400	9	9,06										
	170	2650	12600	9	8,22										
	198	2650	11500	9	7,07										
	227	2500	11100	9	6,17										
	268	2430	10400	9	5,23										
	306	2300	9950	9	4,57										

(1) Finite transmission ratio *i*

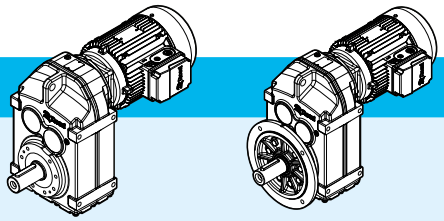

P_1 = 0,12 kW

n_2 min^{-1}	M_2 N m	i	F_{r2} N	fs		kg foot HB	kg foot HBZ	kg flange HB	kg flange HBZ	p.
4	287	228,99	13000	3,2	**iP 673 – HB2 63 B 6 B16B** 3	37	39	44	45	270
4,7	244	195,39	13000	3,8						
5,3	216	170,85	13000	4,3						
5,6	205	162,31	13000	4,5						
6,4	179	142,4	13000	5,2						
4,6	249	199,7	11300	2,7	**iP 573 – HB2 63 B 6 B16B** 3	31	33	38	40	268
5	229	183,6	11400	2,9						
5,8	198	157,09	11500	3,4						
6,7	171	136,16	11500	3,9						
7,2	159	127,27	11500	4,2						
6,9	166	199,7	11500	4	**iP 573 – HB2 63 A 4 B16B** 3	31	33	37	39	268
7,5	153	183,6	11500	4,4						
8,7	132	157,09	11500	5						
10	115	136,16	11500	5,7						
4,8	239	190,76	7450	1,85	**iP 473 – HB2 63 B 6 B12B** 3	25	27	28	30	266
5,2	220	175,38	7590	2						
6,1	188	150,06	7780	2,4						
7	164	130,07	7910	2,7						
7,5	153	121,57	7960	2,9						
8,7	132	105,09	8050	3,4						
10	115	89,29	8120	4						
11	104	79,72	8150	4,5						
7,2	159	190,76	7970	2,8	**iP 473 – HB2 63 A 4 B12B** 3	24	26	28	29	266
7,8	147	175,38	8020	3,1						
9,1	126	150,06	8100	3,6						
11	104	130,07	8150	4,1						
7,1	161	128,51	4680	1,4	**iP 373 – HB2 63 B 6 B12B** 3	21	22	23	24	264
7,7	149	117,88	4830	1,5						
9,1	126	100,36	5030	1,75						
11	104	86,53	5170	2,1						
11	104	80,65	5220	2,2						
11	104	128,51	5220	2,1	**iP 373 – HB2 63 A 4 B12B** 3	20	22	22	24	264
12	96	117,88	5270	2,3						
14	82	100,36	5340	2,7						
16	72	86,53	5390	3,1						
17	67	80,65	5410	3,3						
8,3	138	109,9	4500	1,05	**iP 273 – HB2 63 B 6 B12B** 3	15	17	16	18	262
9,6	119	94,76	4500	1,2						
10	115	88,32	4500	1,3						
12	96	77,21	4500	1,5						

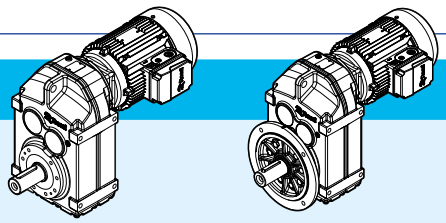

P_1 = 0,12 kW

n_2 min^{-1}	M_2 N m	i	F_{r2} N	fs			kg foot HB	kg foot HBZ	kg flange HB	kg flange HBZ	p.
9,7	118	140,74	4500	1,25	**iP 273 – HB2 63 A 4 B12B**	3	14	16	16	18	262
11	104	129,09	4500	1,35							
12	96	109,9	4500	1,6							
14	82	94,76	4500	1,85							
16	72	88,32	4500	1,95							
18	64	77,21	4500	2,2							
19	60	72,37	4500	2,4							
21	55	63,86	4500	2,7							
24	48	56,62	4500	3,1							
27	42	50,19	4500	3,5							
29	40	46,78	4500	3,7							
34	34	40,89	4500	4,2							
36	32	38,33	4430	4,5							
41	28	33,83	4270	5,1							
46	25	29,56	4100	5,9	**iP 272 – HB2 63 A 4 B12B**	2	14	16	16	17	262
50	23	27,18	4000	6,4							
59	19	23,25	3820	7,5							
68	17	20,15	3650	8,6							
73	16	18,84	3580	9,2							
84	14	16,28	3420	11							
99	12	13,84	3250	13							
111	10	12,35	3140	14							
130	8,8	10,55	2990	16							
139	8,2	9,88	2920	18							
146	7,8	9,4	2870	18							
169	6,8	8,13	2740	19							
198	5,8	6,91	2600	21							
222	5,2	6,17	2510	23							
260	4,4	5,27	2390	24							
278	4,1	4,93	2340	25							
330	3,5	4,16	2210	27							

P_1 = 0,18 kW

3,2	537	281,71	19600	3,2	**iP 773 – HB2 71 A 6 B20B**	3	63	66	74	77	272
3,5	491	262,93	19700	3,4							
4	430	225,79	19800	4							
4	430	228,99	12700	2,1	**iP 673 – HB2 71 A 6 B16B**	3	38	41	45	48	270
4,7	366	195,39	12900	2,5							
5,3	324	170,85	13000	2,9							
5,9	291	228,99	13000	3,2	**iP 673 – HB2 63 B 4 B16B**	3	37	39	44	45	270
7	246	195,39	13000	3,7							
8	215	170,85	13000	4,1							

P_1 = 0,18 kW

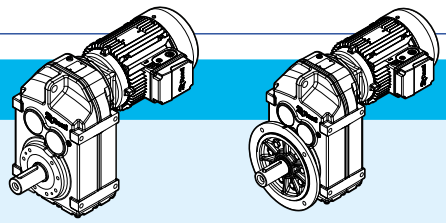

n_2 min^{-1}	M_2 N m	i	F_{r2} N	fs			kg foot HB	kg foot HBZ	kg flange HB	kg flange HBZ	p.
4,6	374	199,7	10700	1,8	**iP 573 – HB2 71 A 6 B16B**	3	33	36	39	42	268
5	344	183,6	10900	1,95							
5,8	296	157,09	11200	2,3							
6,7	257	136,16	11400	2,6							
7,2	239	127,27	11500	2,8							
8,3	207	110,01	11500	3,2							
6,8	253	199,7	11400	2,7	**iP 573 – HB2 63 B 4 B16B**	3	31	33	38	40	268
7,4	232	183,6	11500	2,9							
8,7	198	157,09	11500	3,3							
10	172	136,16	11500	3,8							
11	156	127,27	11500	4							
4,8	358	190,76	6460	1,25	**iP 473 – HB2 71 A 6 B12B**	3	26	29	30	32	266
5,2	331	175,38	6780	1,35							
6,1	282	150,06	7220	1,6							
7	246	130,07	7500	1,85							
7,5	229	121,57	7600	1,95							
7,1	242	190,76	7540	1,85	**iP 473 – HB2 63 B 4 B12B**	3	25	27	28	30	268
7,8	220	175,38	7660	2							
9,1	189	150,06	7840	2,4							
10	172	130,07	7950	2,7							
11	156	121,57	8000	2,9							
7,7	223	117,88	3960	1	**iP 373 – HB2 71 A 6 B12B**	3	22	25	24	27	264
9,1	189	100,36	4450	1,2							
11	156	86,53	4750	1,35							
11	156	80,65	4860	1,45							
13	132	70,5	5030	1,7							
11	156	128,51	4770	1,4	**iP 373 – HB2 63 B 4 B12B**	3	21	22	23	24	264
12	143	117,88	4900	1,5							
14	123	100,36	5080	1,75							
16	107	86,53	5200	2							
17	101	80,65	5250	2,2							
19	90	70,5	5320	2,5							
21	82	66,09	5350	2,7							
23	75	58,32	5390	3							
12	143	109,9	4500	1,05	**iP 273 – HB2 63 B 4 B12B**	3	15	17	16	18	262
14	123	94,76	4500	1,2							
15	115	88,32	4500	1,3							
18	96	77,21	4500	1,5							
19	90	72,37	4500	1,6							
21	82	63,86	4500	1,8							
24	72	56,62	4500	2							
27	64	50,19	4500	2,3							
29	59	46,78	4500	2,5							
33	52	40,89	4360	2,8							
35	49	38,33	4290	3							
40	43	33,83	4150	3,4							

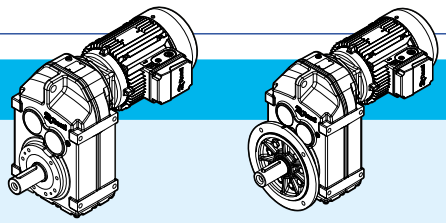

P_1 = 0,18 kW

n_2 min^{-1}	M_2 N m	i	F_{r2} N	fs			kg foot HB	kg foot HBZ	kg flange HB	kg flange HBZ	p.
46	37	29,56	4000	3,9	**iP 272 – HB2 63 B 4 B12B**	2	15	16	16	18	262
50	34	27,18	3900	4,2							
58	30	23,25	3730	4,9							
67	26	20,15	3580	5,7							
72	24	18,84	3510	6,1							
84	20	16,28	3360	7							
98	18	13,84	3200	8,3							
110	16	12,35	3100	9,3							
129	13	10,55	2950	11							
138	12	9,88	2890	12							
145	12	9,4	2840	12							
167	10	8,13	2710	13							
197	8,7	6,91	2580	14							
221	7,8	6,17	2490	15							
258	6,7	5,27	2370	16							
276	6,2	4,93	2320	17							
327	5,3	4,16	2200	18							
344	5	8,13	2190	25	**iP 272 – HB2 63 A 2 B12B**	3	14	16	15	17	262
405	4,2	6,91	2080	27							
454	3,8	6,17	2000	29							
532	3,2	5,27	1900	31							
568	3	4,93	1860	32							
674	2,6	4,16	1760	34							

P_1 = 0,25 kW

3,2	746	281,71	19200	2,3	**iP 773 – HB2 71 B 6 B20B**	3	64	67	75	78	272
3,4	702	262,93	19300	2,4							
4	597	225,79	19500	2,8							
4,5	531	198,31	19700	3,2							
4,8	497	188,4	19700	3,4							
3,9	612	228,99	11900	1,5	**iP 673 – HB2 71 B 6 B16B**	3	39	42	46	48	270
4,6	519	195,39	12400	1,8							
5,3	450	170,85	12600	2							
5,5	434	162,31	12700	2,1							
6,3	379	142,4	12900	2,4							
6,1	391	228,99	12800	2,4	**iP 673 – HB2 71 A 4 B16B**	3	38	41	45	47	270
7,2	332	195,39	13000	2,7							
8,2	291	170,85	13000	3,1							
8,6	278	162,31	13000	3,2							
9,8	244	142,4	13000	3,6							
4,5	531	199,7	9780	1,25	**iP 573 – HB2 71 B 6 B16B**	3	34	36	40	43	268
4,9	487	183,6	10100	1,4							
5,7	419	157,09	10500	1,6							
6,6	362	136,16	10800	1,85							
7,1	336	127,27	11000	2							
8,2	291	110,01	11200	2,3							

P_1 = 0,25 kW

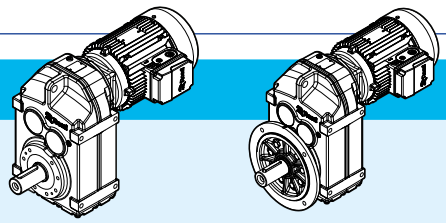

n_2 min^{-1}	M_2 N m	i	F_{r2} N	fs			kg foot HB	kg foot HBZ	kg flange HB	kg flange HBZ	p.
7	341	199,7	10900	1,95	iP 573 – HB2 71 A 4 B16B	3	33	35	39	42	268
7,6	314	183,6	11100	2,1							
8,9	268	157,09	11300	2,5							
10	239	136,16	11500	2,8							
11	217	127,27	11500	3							
13	184	110,01	11500	3,4							
6	398	150,06	6040	1,15	iP 473 – HB2 71 B 6 B12B	3	27	30	30	33	266
6,9	346	130,07	6670	1,3							
7,4	323	121,57	6900	1,4							
8,6	278	105,09	7280	1,6							
7,3	327	190,76	6830	1,4	iP 473 – HB2 71 A 4 B12B	3	26	29	29	32	266
8	298	175,38	7080	1,5							
9,3	257	150,06	7420	1,75							
11	217	130,07	7650	2							
12	199	121,57	7730	2,2							
13	184	105,09	7880	2,5							
16	149	89,29	8000	3							
11	217	128,51	4010	1	iP 373 – HB2 71 A 4 B12B	3	22	24	24	26	264
12	199	117,88	4290	1,1							
14	171	100,36	4670	1,3							
16	149	86,53	4900	1,5							
17	140	80,65	4990	1,65							
20	119	70,5	5130	1,85							
21	114	66,09	5180	2							
24	99	58,32	5260	2,3							
26	92	54,54	5300	2,4							
27	88	51,7	5320	2,5							
30	80	47,02	5360	2,8							
32	75	43,83	5380	3							
37	65	38,31	5420	3,4							
39	61	35,91	5440	3,7							
44	54	31,69	5460	4,1							
18	133	77,21	4500	1,1	iP 273 – HB2 71 A 4 B12B	3	16	19	18	20	262
19	126	72,37	4500	1,15							
22	109	63,86	4500	1,35							
25	96	56,62	4480	1,5							
28	85	50,19	4370	1,7							
30	80	46,78	4300	1,8							
34	70	40,89	4170	2,1							
37	65	38,33	4100	2,2							
41	58	33,83	3980	2,5							

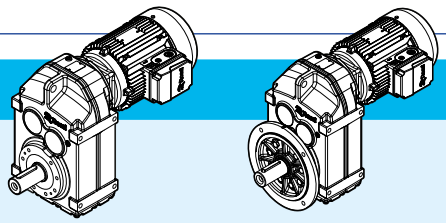

P_1 = 0,25 kW

n_2 min^{-1}	M_2 N m	i	F_{r2} N	fs			kg foot HB	kg foot HBZ	kg flange HB	kg flange HBZ	p.
47	51	29,56	3850	2,9	**iP 272 – HB2 71 A 4 B12B**	2	16	18	17	20	262
52	46	27,18	3760	3,1							
60	40	23,25	3610	3,7							
69	35	20,15	3480	4,2							
74	32	18,84	3410	4,5							
86	28	16,28	3270	5,2							
101	24	13,84	3120	6,1							
113	21	12,35	3020	6,9							
133	18	10,55	2890	8,1							
142	17	9,88	2830	8,6							
149	16	9,4	2770	8,8							
172	14	8,13	2660	9,5							
203	12	6,91	2530	10							
227	11	6,17	2440	11							
266	9	5,27	2330	12							
284	8,4	4,93	2280	12							
337	7,1	4,16	2160	13							
342	7	8,13	2160	18	**iP 272 – HB2 63 B 2 B12B**	2	14	16	16	18	262
403	5,9	6,91	2050	19							
451	5,3	6,17	1980	21							
528	4,5	5,27	1890	22							
564	4,2	4,93	1850	23							
669	3,6	4,16	1750	24							

P_1 = 0,37 kW

3,4	1040	270,68	28900	3,3	**iP 873 – HB2 80 A 6 B25C**	3	108	112	124	128	274
3,6	982	255,37	29000	3,5							
4,1	862	228,93	29200	3,9							
4,1	862	225,79	18800	2	**iP 773 – HB2 80 A 6 B20C**	3	65	69	76	80	272
4,7	752	198,31	19100	2,3							
4,9	721	188,4	19200	2,4							
5,6	631	166,47	19400	2,7							
6,5	544	142,27	19600	3,1							
5	707	281,71	19300	2,4	**iP 773 – HB2 71 B 4 B20B**	3	64	67	75	78	272
5,3	667	262,93	19400	2,6							
6,2	570	225,79	19600	3							
7,1	498	198,31	19700	3,4							
4,8	736	195,39	11000	1,25	**iP 673 – HB2 80 A 6 B16C**	3	40	44	47	51	270
5,4	654	170,85	11600	1,4							
5,7	620	162,31	11800	1,5							
6,5	544	142,4	12200	1,7							
7,7	459	120,79	12600	2							

P_1 = 0,37 kW

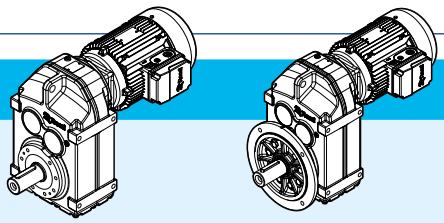

n_2 min^{-1}	M_2 N m	i	F_{r2} N	fs			kg foot HB	kg foot HBZ	kg flange HB	kg flange HBZ	p.
6,1	579	228,99	12100	1,6	**iP 673 – HB2 71 B 4 B16B**	3	39	42	46	48	270
7,2	491	195,39	12500	1,85							
8,2	431	170,85	12700	2,1							
8,6	411	162,31	12800	2,2							
9,8	361	142,4	13000	2,4							
12	294	120,79	13000	2,8							
5,9	599	157,09	9250	1,1	**iP 573 – HB2 80 A 6 B16C**	3	35	39	41	45	268
6,8	520	136,16	9820	1,3							
7,3	484	127,27	10100	1,4							
8,5	416	110,01	10500	1,6							
7	505	199,7	9930	1,35	**iP 573 – HB2 71 B 4 B16B**	3	33	36	40	43	268
7,6	465	183,6	10200	1,45							
8,9	397	157,09	10600	1,65							
10	353	136,16	10900	1,9							
11	321	127,27	11000	2							
13	272	110,01	11300	2,3							
15	236	93,47	11500	2,7							
17	208	83,46	11500	3							
9,3	380	150,06	6260	1,2	**iP 473 – HB2 71 B 4 B12B**	3	27	30	30	33	266
11	321	130,07	6820	1,35							
13	272	105,09	7370	1,7							
16	221	89,29	7640	2							
18	196	79,72	7780	2,2							
21	168	68,09	7920	2,6							
21	168	65,36	7950	2,7							
16	221	86,53	4050	1,05	**iP 373 – HB2 71 B 4 B12B**	3	23	25	25	27	264
17	208	80,65	4270	1,1							
20	177	70,5	4600	1,25							
21	168	66,09	4730	1,35							
24	147	58,32	4920	1,5							
26	136	54,54	5000	1,65							
27	131	51,7	5060	1,7							
30	118	47,02	5140	1,9							
32	110	43,83	5200	2							
37	96	38,31	5280	2,3							
39	91	35,91	5310	2,5							
44	80	31,69	5270	2,8							
50	71	28,09	5110	3,2							
59	60	23,88	4900	3,7							
25	141	56,62	4060	1	**iP 273 – HB2 71 B 4 B12B**	3	17	20	18	21	262
28	126	50,19	4000	1,15							
30	118	46,78	3960	1,25							
34	104	40,89	3870	1,4							
37	96	38,33	3820	1,5							
41	86	33,83	3730	1,7							

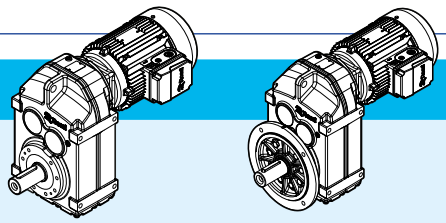

P_1 = 0,37 kW

n_2 min^{-1}	M_2 N m	i	F_{r2} N	fs			kg foot HB	kg foot HBZ	kg flange HB	kg flange HBZ	p.
47	75	29,56	3630	1,95	**iP 272 – HB2 71 B 4 B12B**	2	17	19	18	21	262
52	68	27,18	3560	2,1							
60	59	23,25	3440	2,5							
69	51	20,15	3320	2,9							
74	48	18,84	3270	3							
86	41	16,28	3150	3,5							
101	35	13,84	3020	4,2							
113	31	12,35	2930	4,7							
133	27	10,55	2800	5,4							
142	25	9,88	2750	5,8							
149	24	9,4	2690	5,9							
172	21	8,13	2590	6,4							
203	17	6,91	2470	7							
227	16	6,17	2390	7,5							
266	13	5,27	2280	8,1							
284	12	4,93	2240	8,4							
337	10	4,16	2120	9,1							
344	10	8,13	2120	12	**iP 272 – HB2 71 A 2 B12B**	2	16	18	17	19	262
405	8,7	6,91	2010	13							
454	7,8	6,17	1940	14							
532	6,6	5,27	1850	15							
568	6,2	4,93	1820	15							
674	5,2	4,16	1720	17							

P_1 = 0,55 kW

3,4	1540	270,68	27900	2,2	**iP 873 – HB2 80 B 6 B25C**	3	110	114	126	130	274
3,6	1460	255,37	28100	2,3							
4	1310	228,93	28400	2,6							
4,7	1120	197,2	28800	3							
5,1	1030	179,97	29000	3,3							
4,1	1280	225,79	17300	1,3	**iP 773 – HB2 80 B 6 B20C**	3	67	71	78	82	272
4,6	1140	198,31	18000	1,5							
4,9	1070	188,4	18200	1,6							
5,5	955	166,47	18700	1,8							
6,5	808	142,27	19100	2,1							
7,1	740	130,42	19200	2,3							
6,2	847	225,79	18900	2	**iP 773 – HB2 80 A 4 B20C**	3	65	69	76	80	272
7,1	740	198,31	19200	2,3							
7,5	700	188,4	19300	2,4							
8,4	625	166,47	19500	2,7							
9,9	531	142,27	19700	3,2							
11	478	130,42	19700	3,5							
12	438	114,45	19800	4							
13	404	108,46 (1)	19900	4,2							
15	350	94,93	19900	4,8							

(1) Finite transmission ratio *i*

P_1 = 0,55 kW

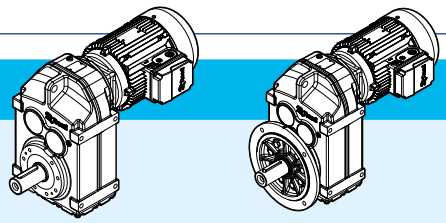

n_2 min^{-1}	M_2 N m	i	F_{r2} N	fs			kg foot HB	kg foot HBZ	kg flange HB	kg flange HBZ	p.
7,2	730	195,39	11200	1,25	**iP 673 – HB2 80 A 4 B16C**	3	40	44	47	50	270
8,2	641	170,85	11700	1,4							
8,7	604	162,31	11900	1,45							
9,9	531	142,4	12300	1,65							
12	438	120,79	12700	1,9							
13	404	109,04	12800	2,1							
15	350	95,94	13000	2,4							
16	328	90,59	13000	2,5							
18	292	79,76	13000	2,9							
8,9	590	157,09	9390	1,15	**iP 573 – HB2 80 A 4 B16C**	3	34	38	41	45	268
10	525	136,16	9930	1,25							
11	478	127,27	10200	1,35							
13	404	110,01	10600	1,55							
15	350	93,47	10900	1,85							
17	309	83,46	11100	2							
19	276	72,98	11300	2,3							
21	250	68,22	11400	2,5							
24	219	58,97	11500	2,9							
13	404	105,09	6130	1,15	**iP 473 – HB2 80 A 4 B12C**	3	28	32	31	35	266
16	328	89,29	6800	1,35							
18	292	79,72	7130	1,5							
21	250	68,09	7460	1,75							
21	250	65,36	7530	1,85							
25	210	56,49	7730	2,1							
29	181	48 (1)	7890	2,5							
33	159	42,86	7980	2,8							
24	219	58,32	4090	1,05	**iP 373 – HB2 80 A 4 B12C**	3	24	28	26	30	264
26	202	54,54	4300	1,1							
27	195	51,7	4440	1,15							
30	175	47,02	4650	1,25							
32	164	43,83	4780	1,35							
37	142	38,31	4970	1,55							
39	135	35,91	5040	1,65							
44	119	31,69	4940	1,9							
50	105	28,09	4820	2,1							
59	89	23,88	4640	2,5							
59	89	23,63	4630	2,5	**iP 372 – HB2 80 A 4 B12C**	2	23	27	25	29	264
68	77	20,57	4480	2,9							
73	72	19,27	4410	3,1							
83	63	17,03	4280	3,5							
98	54	14,33	4090	4,2							

(1) Finite transmission ratio *i*

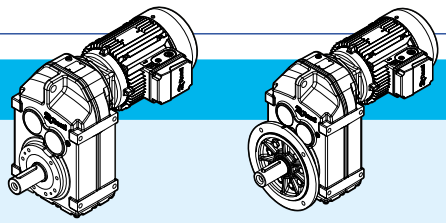

P_1 = 0,55 kW

n_2 min^{-1}	M_2 N m	i	F_{r2} N	fs			kg foot HB	kg foot HBZ	kg flange HB	kg flange HBZ	p.
37	142	77,21	3410	1	**iP 273 – HB2 71 B 2 B12B**	3	17	104	19	106	262
39	135	72,37	3390	1,1							
44	119	63,86	3340	1,2							
50	105	56,62	3290	1,35							
56	94	50,19	3230	1,55							
60	88	23,25	3180	1,65	**iP 272 – HB2 80 A 4 B12C**	2	18	21	19	23	262
70	75	20,15	3100	1,9							
75	70	18,84	3060	2,1							
86	61	16,28	2970	2,4							
102	51	13,84	2860	2,8							
114	46	12,35	2790	3,1							
133	39	10,55	2680	3,7							
142	37	9,88	2640	3,9							
149	35	9,4	2570	4							
173	30	8,13	2480	4,3							
203	26	6,91	2380	4,8							
228	23	6,17	2310	5							
267	20	5,27	2210	5,5							
285	18	4,93	2170	5,7							
338	16	4,16	2070	6,1							
347	15	8,13	2060	8,1	**iP 272 – HB2 71 B 2 B12B**	2	17	104	18	106	262
408	13	6,91	1970	8,9							
457	11	6,17	1900	9,5							
535	9,8	5,27	1820	10							
572	9,2	4,93	1780	10							
679	7,7	4,16	1690	11							

P_1 = 0,75 kW

3,4	2110	276,77	35300	2,3	**iP 973 – HB3 90 S 6 B30D**	3	180	184	213	217	276
3,7	1940	253,41	35600	2,5							
4,2	1710	223,88	36000	2,8							
3,4	2110	270,68	26400	1,6	**iP 873 – HB3 90 S 6 B25D**	3	116	120	132	136	274
3,6	1990	255,37	26700	1,7							
4,1	1750	228,93	27300	1,9							
4,7	1520	197,2	27900	2,2							
5,2	1380	179,97	28200	2,4							
5,8	1230	159,61	28600	2,7							
5,2	1380	270,68	28200	2,4	**iP 873 – HB3 80 B 4 B25C**	3	112	116	128	132	274
5,5	1300	255,37	28400	2,6							
6,2	1160	228,93	28700	2,9							
4,7	1520	198,31	15800	1,1	**iP 773 – HB3 90 S 6 B20D**	3	73	77	84	88	272
4,9	1460	188,4	16300	1,15							
5,6	1280	166,47	17200	1,35							
6,5	1100	142,27	18000	1,55							
7,1	1010	130,42	18400	1,7							

P_1 = 0,75 kW

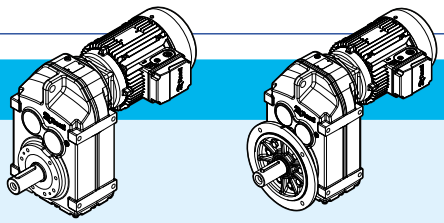

n_2 min^{-1}	M_2 N m	i	F_{r2} N	fs			kg foot HB	kg foot HBZ	kg flange HB	kg flange HBZ	p.
6,2	1160	225,79	17800	1,5	**iP 773 – HB3 80 B 4 B20C**	3	69	73	80	84	272
7,1	1010	198,31	18400	1,7							
7,5	955	188,4	18500	1,8							
8,5	843	166,47	18900	2							
9,9	723	142,27	19200	2,4							
11	651	130,42	19400	2,6							
12	597	114,45	19600	2,9							
13	551	108,46 (1)	19600	3,1							
8,3	863	170,85	10000	1,05	**iP 673 – HB3 80 B 4 B16C**	3	44	48	51	55	270
8,7	823	162,31	10400	1,1							
9,9	723	142,4	11200	1,2							
12	597	120,79	11900	1,4							
13	551	109,04	12200	1,55							
15	478	95,94	12500	1,75							
16	448	90,59	12600	1,85							
18	398	79,76	12800	2,1							
21	341	67,65	13000	2,5							
23	311	61,07	13000	2,7							
11	651	127,27	7950	1	**iP 573 – HB3 80 B 4 B16C**	3	39	43	45	49	268
13	551	110,01	9590	1,15							
15	478	93,47	10200	1,35							
17	421	83,46	10500	1,5							
19	377	72,98	10800	1,7							
21	341	68,22	10900	1,85							
24	298	58,97	11200	2,1							
28	256	50,1	11400	2,5							
32	224	44,73	11300	2,8							
18	398	79,72	5970	1,1	**iP 473 – HB3 80 B 4 B12C**	3	32	36	36	40	266
21	341	68,09	6680	1,3							
22	326	65,36	6820	1,35							
25	287	56,49	7220	1,55							
29	247	48 (1)	7540	1,85							
33	217	42,86	7700	2,1							
39	184	36,61	7860	2,4							
41	175	34,29	7770	2,6							
49	146	28,88	7460	3,1							
30	239	47,02	3730	0,95	**iP 373 – HB3 80 B 4 B12C**	3	28	32	30	34	264
32	224	43,83	4020	1							
37	194	38,31	4420	1,15							
39	184	35,91	4570	1,25							
44	163	31,69	4590	1,4							
50	143	28,09	4500	1,55							

(1) Finite transmission ratio *i*

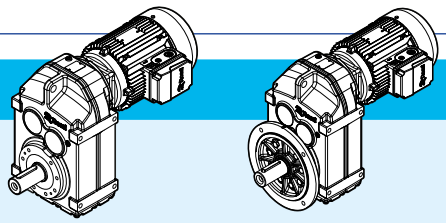

P_1 = 0,75 kW

n_2 min^{-1}	M_2 N m	i	F_{r2} N	fs			kg foot HB	kg foot HBZ	kg flange HB	kg flange HBZ	p.
60	119	23,63	4370	1,85	**iP 372 – HB3 80 B 4 B12C**	2	28	32	30	34	264
69	104	20,57	4250	2,1							
73	98	19,27	4200	2,3							
83	86	17,03	4090	2,6							
98	73	14,33	3930	3,1							
110	65	12,87	3830	3,4							
353	20	8,13	2000	6,1	**iP 272 – HB3 80 A 2 B12C**	2	18	21	20	22	262
416	17	6,91	1920	6,6							
465	15	6,17	1860	7,1							
545	13	5,27	1780	7,6							
582	12	4,93	1740	7,8							
691	10	4,16	1660	8,4							
61	117	23,25	2900	1,25	**iP 272 – HB3 80 B 4 B12C**	2	22	26	24	28	262
70	102	20,15	2860	1,4							
75	96	18,84	2830	1,5							
87	82	16,28	2770	1,75							
102	70	13,84	2700	2,1							
114	63	12,35	2640	2,3							
134	53	10,55	2560	2,7							
143	50	9,88	2520	2,9							
150	48	9,4	2450	2,9							
173	41	8,13	2370	3,2							
204	35	6,91	2280	3,5							
229	31	6,17	2220	3,7							
268	27	5,27	2140	4							
286	25	4,93	2100	4,2							
339	21	4,16	2010	4,5							

P_1 = 1,1 kW

3,4	3090	276,77	33200	1,55	**iP 973 – HB3 90 L 6 B30D**	3	184	191	217	223	276
3,7	2840	253,41	33800	1,7							
4,2	2500	223,88	34500	1,95							
4,9	2140	189,92	35200	2,3							
5,3	1980	174,87	35500	2,5							
5,1	2060	276,77	35400	2,4	**iP 973 – HB3 90 S 4 B30D**	3	183	187	216	220	276
5,6	1880	253,41	35700	2,6							
6,3	1670	223,88	36100	2,9							
4,1	2560	228,93	24800	1,3	**iP 873 – HB3 90 L 6 B25D**	3	120	126	136	142	274
4,7	2240	197,2	25900	1,5							
5,2	2020	179,97	26500	1,65							
5,8	1810	159,61	27200	1,85							

P_1 = 1,1 kW

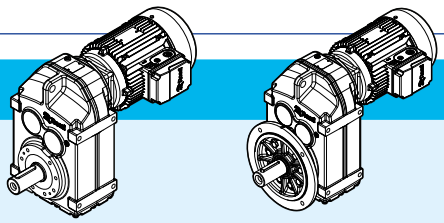

n_2 min^{-1}	M_2 N m	i	F_{r2} N	fs			kg foot HB	kg foot HBZ	kg flange HB	kg flange HBZ	p.
5,2	2020	270,68	26600	1,65	**iP 873 – HB3 90 S 4 B25D**	3	119	123	135	139	274
5,6	1880	255,37	26900	1,75							
6,2	1690	228,93	27400	2							
7,2	1460	197,2	28000	2,3							
7,9	1330	179,97	28300	2,5							
8,9	1180	159,61	28600	2,8							
11	955	134,16	29000	3,4							
12	875	123,29	29200	3,7							
7,2	1460	198,31	16200	1,15	**iP 773 – HB3 90 S 4 B20D**	3	76	80	87	91	272
7,5	1400	188,4	16600	1,2							
8,5	1240	166,47	17400	1,4							
10	1050	142,27	18200	1,6							
11	955	130,42	18500	1,75							
12	875	114,45	18900	2							
13	808	108,46 (1)	19000	2,1							
15	700	94,93	19300	2,4							
17	618	85,52	19500	2,7							
19	553	75,02	19600	3,1							
12	875	120,79	9820	0,95	**iP 673 – HB3 90 S 4 B16D**	3	51	55	58	62	270
13	808	109,04	10600	1,05							
15	700	95,94	11300	1,2							
16	657	90,59	11600	1,3							
18	584	79,76	12000	1,45							
21	500	67,65	12500	1,7							
23	457	61,07	12700	1,85							
26	404	53,73	12900	2,1							
28	375	50,74	12900	2,2							
33	318	43,2	13000	2,6							
36	292	39,26	13000	2,9							
42	250	34,01	13000	3,3							
17	618	83,46	9180	1,05	**iP 573 – HB3 90 S 4 B16D**	3	45	49	52	56	268
19	553	72,98	9740	1,2							
21	500	68,22	9980	1,25							
24	438	58,97	10400	1,45							
28	375	50,1	10800	1,7							
32	328	44,73	10600	1,9							
37	284	38,21	10300	2,2							
40	263	35,79	10100	2,3							
47	224	30,15	9720	2,7							
25	420	56,49	5680	1,1	**iP 473 – HB3 90 S 4 B12D**	3	39	43	42	46	266
30	350	48 (1)	6600	1,25							
33	318	42,86	6970	1,4							
39	269	36,61	7300	1,65							
41	256	34,29	7210	1,75							
49	214	28,88	6990	2,1							

(1) Finite transmission ratio *i*

iP

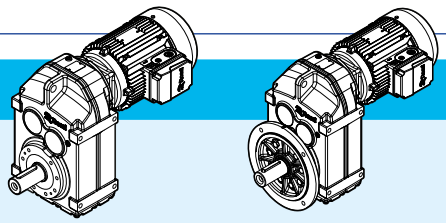

P_1 = 1,1 kW

n_2 min^{-1}	M_2 N m	i	F_{r2} N	fs			kg foot HB	kg foot HBZ	kg flange HB	kg flange HBZ	p.
46	228	30,86	7080	1,95	**iP 472 – HB3 90 S 4 B12D**	2	38	42	41	45	266
48	219	29,32	7010	2,1							
55	191	25,72	6820	2,4							
65	162	21,82	6580	2,8							
72	146	19,7	6430	3,1							
45	233	31,69	3830	0,95	**iP 373 – HB3 90 S 4 B12D**	3	34	38	37	41	264
51	206	28,09	3960	1,1							
59	178	23,88	3920	1,25							
69	152	20,57	3860	1,45	**iP 372 – HB3 90 S 4 B12D**	2	34	38	36	40	264
74	142	19,27	3820	1,55							
83	127	17,03	3760	1,8							
99	106	14,33	3650	2,1							
110	96	12,87	3580	2,4							
128	82	11,08	3470	2,6							
136	77	10,42	3430	2,7							
158	66	8,97	3320	2,9							
70	150	20,15	2440	0,95	**iP 272 – HB3 90 S 4 B12D**	2	28	32	30	34	262
75	140	18,84	2440	1,05							
87	121	16,28	2440	1,2							
103	102	13,84	2410	1,4							
115	91	12,35	2380	1,6							
135	78	10,55	2330	1,85							
144	73	9,88	2310	2							
151	70	9,4	2230	2							
175	60	8,13	2180	2,2							
206	51	6,91	2120	2,4							
230	46	6,17	2080	2,5							
270	39	5,27	2010	2,8							
288	36	4,93	1990	2,9							
342	31	4,16	1910	3,1							
354	30	8,13	1910	4,1	**iP 272 – HB3 80 B 2 B12C**	2	22	25	23	27	262
416	25	6,91	1840	4,5							
466	23	6,17	1790	4,8							
546	19	5,27	1720	5,2							
583	18	4,93	1690	5,3							
692	15	4,16	1610	5,7							

P_1 = 1,5 kW

3,4	4210	276,77	30400	1,15	**iP 973 – HB3 100 LA 6 B30E**	3	191	197	224	230	276
3,7	3870	253,41	31400	1,25							
4,2	3410	223,88	32500	1,45							
5	2870	189,92	33700	1,7							
5,4	2650	174,87	34200	1,85							

P_1 = 1,5 kW

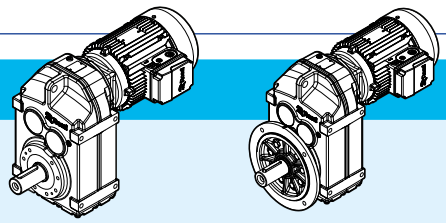

n_2 min^{-1}	M_2 N m	i	F_{r2} N	fs			kg foot HB	kg foot HBZ	kg flange HB	kg flange HBZ	p.
5,2	2750	276,77	34000	1,75	**iP 973 – HB3 90 L 4 B30D**	3	184	190	216	222	276
5,6	2560	253,41	34400	1,9							
6,4	2240	223,88	35000	2,2							
7,5	1910	189,92	35600	2,6							
8,2	1750	174,87	35900	2,8							
5,3	2700	270,68	24300	1,25	**iP 873 – HB3 90 L 4 B25D**	3	119	125	135	141	274
5,6	2560	255,37	24800	1,3							
6,2	2310	228,93	25700	1,45							
7,3	1960	197,2	26600	1,7							
7,9	1810	179,97	27100	1,85							
9	1590	159,61	27700	2,1							
11	1300	134,16	28300	2,5							
13	1100	109,49	28800	3,1							
15	955	97,89	29100	3,4							
8,6	1670	166,47	14800	1	**iP 773 – HB3 90 L 4 B20D**	3	76	82	87	93	272
10	1430	142,27	16400	1,2							
11	1300	130,42	17000	1,3							
12	1190	114,45	17800	1,5							
13	1100	108,46 (1)	18100	1,55							
15	955	94,93	18600	1,8							
17	843	85,52	18900	2							
19	754	75,02	19200	2,3							
20	716	72,5	19200	2,3							
22	651	66,46	19400	2,6							
25	573	58,32	19600	2,9							
26	551	55,27	19600	3,1							
30	478	48,37	19700	3,5							
33	434	43,58	19800	3,9							
37	387	38,23	19900	4,4							
39	367	36,58	19900	3,4	**iP 772 – HB3 90 L 4 B20D**	2	73	79	85	91	272
45	318	31,51	20000	4,9							
16	895	90,59	9650	0,95	**iP 673 – HB3 90 L 4 B16D**	3	51	57	58	64	270
18	796	79,76	10600	1,05							
21	682	67,65	11500	1,25							
23	623	61,07	11900	1,4							
27	531	53,73	12300	1,55							
28	512	50,74	12400	1,65							
33	434	43,2	12700	1,95							
36	398	39,26	12900	2,1							
39	367	36,3	13000	2,3	**iP 672 – HB3 90 L 4 B16D**	2	50	56	57	63	270
45	318	32,08	13000	2,6							
52	275	27,41	13000	3							
57	251	25,13	13000	3,3							

(1) Finite transmission ratio *i*

P_1 = 1,5 kW

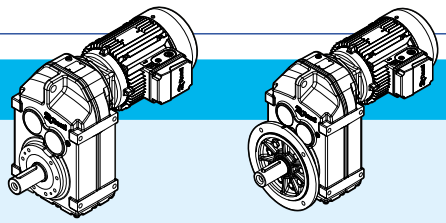

n_2 min^{-1}	M_2 N m	i	F_{r2} N	fs			kg foot HB	kg foot HBZ	kg flange HB	kg flange HBZ	p.
24	597	58,97	9370	1,05	**iP 573 – HB3 90 L 4 B16D**	3	46	52	53	59	268
29	494	50,1	9980	1,25							
32	448	44,73	9940	1,4							
37	387	38,21	9680	1,65							
40	358	35,79	9560	1,75							
47	305	30,15	9240	2							
39	367	36,61	6460	1,25	**iP 473 – HB3 90 L 4 B12D**	3	39	45	43	49	266
42	341	34,29	6600	1,3							
50	287	28,88	6460	1,55							
46	311	30,86	6520	1,45	**iP 472 – HB3 90 L 4 B12D**	2	38	44	42	48	266
49	292	29,32	6480	1,55							
56	256	25,72	6360	1,75							
66	217	21,82	6190	2,1							
73	196	19,7	6070	2,3							
83	173	17,33	5920	2,6							
87	165	16,36	5850	2,7							
103	139	13,93	5650	3,2							
70	205	20,57	3410	1,1	**iP 372 – HB3 90 L 4 B12D**	2	35	41	37	43	264
74	194	19,27	3410	1,15							
84	171	17,03	3390	1,3							
100	143	14,33	3340	1,55							
111	129	12,87	3300	1,75							
129	111	11,08	3230	1,9							
137	105	10,42	3200	1,95							
159	90	8,97	3120	2,2							
178	80	8,01	3060	2,4							
103	139	13,84	2090	1,05	**iP 272 – HB3 90 L 4 B12D**	2	29	35	30	36	262
116	123	12,35	2090	1,15							
136	105	10,55	2090	1,35							
145	99	9,88	2080	1,45							
152	94	9,4	1990	1,5							
176	81	8,13	1970	1,6							
207	69	6,91	1940	1,75							
232	62	6,17	1920	1,9							
271	53	5,27	1880	2							
290	49	4,93	1860	2,1							
344	42	4,16	1800	2,3							
356	40	8,13	1800	3,1	**iP 272 – HB3 90 S 2 B12D**	2	26	30	27	31	262
418	34	6,91	1740	3,3							
469	31	6,17	1700	3,6							
549	26	5,27	1640	3,8							
586	24	4,93	1620	3,9							
695	21	4,16	1550	4,2							

P_1 = 2,2 kW

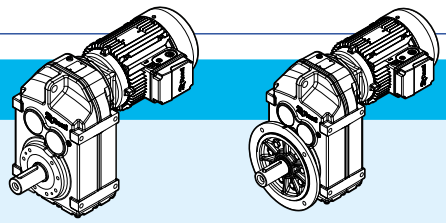

n_2 min^{-1}	M_2 N m	i	F_{r2} N	fs			kg foot HB	kg foot HBZ	kg flange HB	kg flange HBZ	p.
4,3	4890	223,88	21700	1	**iP 973 – HB3 112 M 6 B30F**	3	199	208	231	240	276
5,1	4120	189,92	30500	1,15							
5,5	3820	174,87	31400	1,25							
6,1	3440	156,3	32400	1,4							
5,2	4040	276,77	30700	1,2	**iP 973 – HB3 100 LA 4 B30E**	3	191	197	224	230	276
5,7	3690	253,41	31700	1,3							
6,4	3280	223,88	32700	1,5							
7,6	2760	189,92	33900	1,75							
8,2	2560	174,87	34300	1,9							
9,2	2280	156,3	34900	2,1							
10	2100	140,71	35300	2,4							
11	1910	127,42	35700	2,6							
7,3	2880	197,2	23500	1,15	**iP 873 – HB3 100 LA 4 B25E**	3	129	135	145	151	274
8	2630	179,97	24400	1,3							
9	2330	159,61	25500	1,45							
11	1910	134,16	26600	1,7							
12	1750	123,29	27100	1,85							
13	1620	109,49	27600	2,1							
15	1400	97,89	28000	2,3							
16	1310	88,01	28400	2,6							
19	1110	76,39	27700	3							
21	1000	68,4	27000	3,4							
25	840	56,75	25700	4							
29	724	50,36	25000	4,4							
32	657	45,28	24300	4,8							
13	1620	114,45	14600	1	**iP 773 – HB3 100 LA 4 B20E**	3	86	92	97	103	272
13	1620	108,46 (1)	15200	1,05							
15	1400	94,93	16500	1,25							
17	1240	85,52	17200	1,35							
19	1110	75,02	18000	1,55							
22	955	66,46	18400	1,75							
25	840	58,32	18800	2							
26	808	55,27	19000	2,1							
30	700	48,37	19300	2,4							
33	637	43,58	19400	2,7							
39	539	36,58	19600	2,3	**iP 772 – HB3 100 LA 4 B20E**	2	83	89	94	100	272
46	457	31,51	19800	3,4							
50	420	28,75	19800	3,8							
56	375	25,5 (1)	19900	4,6							
24	875	61,07	9680	0,95	**iP 673 – HB3 100 LA 4 B16E**	3	61	67	67	73	270
27	778	53,73	10700	1,1							
28	750	50,74	11000	1,15							
33	637	43,2	11700	1,35							
37	568	39,26	12100	1,45							
42	500	34,01	12400	1,65							

(1) Finite transmission ratio *i*

P_1 = 2,2 kW

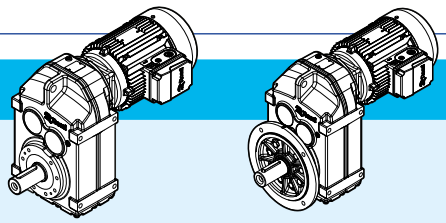

n_2 min^{-1}	M_2 N m	i	F_{r2} N	fs			kg foot HB	kg foot HBZ	kg flange HB	kg flange HBZ	p.
45	467	32,08	12600	1,75	**iP 672 – HB3 100 LA 4 B16E**	2	60	66	66	72	270
53	396	27,41	12800	2,1							
57	369	25,13	12900	2,2							
65	323	22,05	13000	2,5							
69	304	20,9 (1)	13000	2,7							
79	266	18,29	13000	3,1							
32	657	44,73	6640	0,95	**iP 573 – HB3 100 LA 4 B16E**	3	55	61	62	68	268
38	553	38,21	8640	1,1							
40	525	35,79	8590	1,2							
48	438	30,15	8430	1,35							
58	362	24,96	8200	1,7	**iP 572 – HB3 100 LA 4 B16E**	2	55	61	62	68	268
68	309	21,17	7980	2							
75	280	19,11	7820	2,2							
86	244	16,81	7630	2,5							
91	231	15,88	7540	2,6							
56	375	25,72	5560	1,2	**iP 472 – HB3 100 LA 4 B12E**	2	47	53	50	56	266
66	318	21,82	5510	1,4							
73	288	19,7	5460	1,55							
83	253	17,33	5390	1,8							
88	239	16,36	5350	1,9							
103	204	13,93	5220	2,2							
114	184	12,66	5140	2,4							
131	160	10,97	5010	2,8							
161	130	8,96	4710	2,8							
100	210	14,33	2800	1,05	**iP 372 – HB3 100 LA 4 B12E**	2	43	49	45	51	264
112	188	12,87	2810	1,2							
130	162	11,08	2820	1,3							
138	152	10,42	2810	1,35							
161	130	8,97	2790	1,5							
180	117	8,01	2760	1,65							
214	98	6,74	2620	1,55							
238	88	6,05	2580	1,65							
276	76	5,21	2530	1,8							
294	71	4,9	2510	1,85							
341	62	4,22	2440	2							
382	55	3,77	2390	2,1							
177	119	16,28	1720	1,2	**iP 272 – HB3 90 LA 2 B12D**	2	28	34	29	35	262
209	101	13,84	1730	1,35							
234	90	12,35	1730	1,45							
274	77	10,55	1710	1,7							
292	72	9,88	1700	1,8							
356	59	8,13	1610	2,1							
418	50	6,91	1580	2,3							
469	45	6,17	1560	2,4							
549	38	5,27	1520	2,6							
586	36	4,93	1500	2,7							
695	30	4,16	1460	2,9							

P_1 = 3 kW

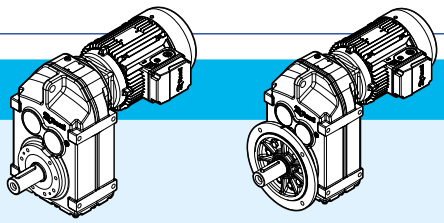

n_2 min^{-1}	M_2 N m	i	F_{r2} N	fs			kg foot HB	kg foot HBZ	kg flange HB	kg flange HBZ	p.
6,5	4410	223,88	29600	1,1	**iP 973 – HB3 112 MA 4 B30E**	3	199	205	231	237	276
7,6	3770	189,92	31500	1,3							
8,3	3450	174,87	32300	1,4							
9,3	3080	156,3	33100	1,6							
10	2870	140,71	33800	1,75							
11	2600	127,42	34400	1,95							
13	2200	112,99	35000	2,2							
14	2050	102,16	35400	2,4							
16	1790	89,85	35800	2,7							
11	2600	134,16	24300	1,25	**iP 873 – HB3 112 MA 4 B25E**	3	137	143	153	159	274
12	2390	123,29	25100	1,4							
13	2200	109,49	26000	1,55							
15	1910	97,89	26700	1,75							
16	1790	88,01	26700	1,95							
19	1510	76,39	26100	2,2							
21	1360	68,4	25500	2,5							
26	1100	56,75	24600	3							
29	988	50,36	23900	3,3							
17	1690	85,52	14400	1	**iP 773 – HB3 112 MA 4 B20E**	3	95	101	106	112	272
19	1510	75,02	15900	1,15							
22	1300	66,46	16900	1,3							
25	1150	58,32	17700	1,5							
26	1100	55,27	18000	1,55							
30	955	48,37	18500	1,8							
33	868	43,58	18800	1,95							
38	754	38,23	19100	2,3							
40	716	36,58	19200	1,75	**iP 772 – HB3 112 MA 4 B20E**	2	92	98	103	109	272
46	623	31,51	19500	2,5							
50	573	28,75	19600	2,8							
57	503	25,5 (1)	19700	3,4							
68	421	21,43	19800	4							
34	843	43,2	10000	1	**iP 673 – HB3 112 MA 4 B16E**	3	68	74	75	81	270
37	774	39,26	10700	1,1							
43	666	34,01	11500	1,25							
45	637	32,08	11700	1,3	**iP 672 – HB3 112 MA 4 B16E**	2	67	73	74	80	270
53	541	27,41	12200	1,5							
58	494	25,13	12400	1,65							
66	434	22,05	12700	1,9							
69	415	20,9 (1)	12800	2							
79	363	18,29	12900	2,3							
88	326	16,48	13000	2,5							
100	287	14,46	13000	2,9							

(1) Finite transmission ratio *i*

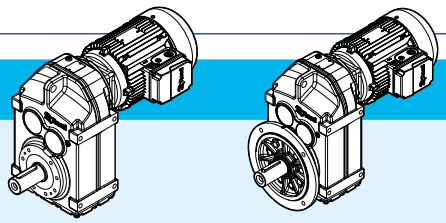

P_1 = 3 kW

n_2 min^{-1}	M_2 N m	i	F_{r2} N	fs			kg foot HB	kg foot HBZ	kg flange HB	kg flange HBZ	p.
58	494	24,96	7420	1,25	**iP 572 – HB3 112 MA 4 B16E**	2	62	68	69	75	268
68	421	21,17	7310	1,45							
76	377	19,11	7220	1,6							
86	333	16,81	7100	1,85							
91	315	15,88	7040	1,95							
107	268	13,52	6850	2,3							
118	243	12,29	6730	2,5							
136	211	10,64	6540	2,9							
74	387	19,7	4760	1,15	**iP 472 – HB3 112 MA 4 B12E**	2	55	61	59	65	266
84	341	17,33	4760	1,3							
89	322	16,36	4760	1,4							
104	275	13,93	4720	1,65							
115	249	12,66	4690	1,8							
132	217	10,97	4620	2,1							
162	177	8,96	4350	2,1							
131	219	11,08	2340	0,95	**iP 372 – HB3 112 MA 4 B12E**	2	51	57	53	59	264
139	206	10,42	2360	1							
162	177	8,97	2400	1,1							
181	158	8,01	2410	1,2							
215	133	6,74	2290	1,15							
240	119	6,05	2290	1,2							
278	103	5,21	2280	1,35							
296	97	4,9	2270	1,35							
344	83	4,22	2240	1,45							
385	74	3,77	2210	1,55							

P_1 = 4 kW

8,3	4600	174,87	29100	1,05	**iP 973 – HB3 112 M 4 B30F**	3	201	210	233	242	276
9,3	4110	156,3	30500	1,2							
10	3820	140,71	31700	1,3							
11	3470	127,42	32500	1,45							
13	2940	112,99	33400	1,65							
14	2730	102,16	34100	1,8							
15	2550	97,58	34300	1,9							
16	2390	89,85	34700	2							
18	2120	80,31	35200	2,3							
20	1910	72,29	35600	2,5							
22	1740	65,47	35900	2,8							
13	2940	109,49	23500	1,15	**iP 873 – HB3 112 M 4 B25F**	3	139	148	155	164	274
15	2550	97,89	24600	1,3							
16	2390	88,01	24500	1,45							
19	2010	76,39	24100	1,65							
21	1820	68,4	23800	1,85							
26	1470	56,75	23100	2,2							
29	1320	50,36	22600	2,4							
32	1190	45,28	22200	2,6							

P_1 = 4 kW

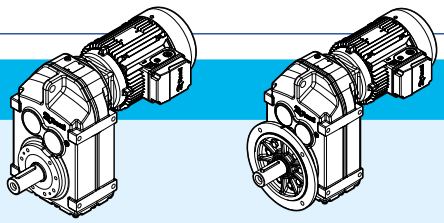

n_2 min^{-1}	M_2 N m	i	F_{r2} N	fs			kg foot HB	kg foot HBZ	kg flange HB	kg flange HBZ	p.
22	1740	66,46	13900	0,95	**iP 773 – HB3 112 M 4 B20F**	3	97	106	108	117	272
25	1530	58,32	15600	1,1							
26	1470	55,27	16100	1,15							
30	1270	48,37	17100	1,35							
33	1160	43,58	17700	1,5							
38	1010	38,23	18300	1,7							
43	888	33,74	18700	1,85							
48	796	29,91	19000	2							
57	670	25,54	19300	2,3							
46	830	31,51	18900	1,85	**iP 772 – HB3 112 M 4 B20F**	2	94	103	105	114	272
50	764	28,75	19100	2,1							
57	670	25,5 (1)	19300	2,5							
68	562	21,43	19600	3							
74	516	19,7	19700	3,3							
53	721	27,41	11200	1,15	**iP 672 – HB3 112 M 4 B16F**	2	69	78	76	85	270
58	659	25,13	11600	1,25							
66	579	22,05	12000	1,4							
69	554	20,9 (1)	12200	1,5							
79	484	18,29	12500	1,7							
88	434	16,48	12700	1,9							
100	382	14,46	12900	2,2							
114	335	12,76	13000	2,4							
128	298	11,31	13000	2,8							
150	255	9,66	13000	3,2							
160	239	9,08	12900	2,5							
169	226	8,6	12700	2,8							
193	198	7,53	12300	3,5							
214	179	6,78	12000	3,9							
244	157	5,95	11600	4,4							
276	138	5,25	11300	4,8							
311	123	4,66	10900	5,1							
365	105	3,97	10500	5,3							
68	562	21,17	6490	1,1	**iP 572 – HB3 112 M 4 B16F**	2	64	73	71	80	268
76	503	19,11	6480	1,2							
86	444	16,81	6440	1,35							
91	420	15,88	6420	1,45							
107	357	13,52	6320	1,7							
118	324	12,29	6240	1,85							
136	281	10,64	6120	2,1							
156	245	9,31	5820	1,8							
177	216	8,19	5700	2,1							
188	203	7,73	5650	2,3							
220	174	6,58	5480	2,7							
242	158	5,98	5380	2,9							
280	136	5,18	5220	3,4							

(1) Finite transmission ratio *i*

iP

P_1 = 5,5 kW

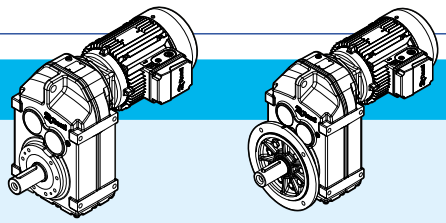

n_2 min^{-1}	M_2 N m	i	F_{r2} N	fs			kg foot HB	kg foot HBZ	kg flange HB	kg flange HBZ	p.
12	4380	127,42	29000	1,05	iP 973 – HB3 132 S 4 B30G	3	225	236	257	268	276
13	4040	112,99	30600	1,2							
14	3750	102,16	31700	1,35							
15	3500	97,58	32100	1,4							
16	3280	89,85	32800	1,5							
17	3090	86,59	33100	1,55							
18	2920	80,31	33600	1,7							
19	2760	75,63	33900	1,8							
20	2630	72,29	34200	1,85							
22	2390	65,47	34700	2							
25	2100	58,06	34400	2,3							
28	1880	52,49	33700	2,5							
17	3090	88,01	11900	1,05	iP 873 – HB3 132 S 4 B25G	3	163	174	179	190	274
19	2760	76,39	21200	1,25							
21	2500	68,4	21200	1,35							
26	2020	56,75	21000	1,65							
29	1810	50,36	20700	1,8							
32	1640	45,28	20500	1,95							
37	1420	39,3	20100	2,2							
42	1250	35,19	19700	2,3							
50	1050	29,2	19100	2,7							
43	1220	33,92	19600	2,4	iP 872 – HB3 132 S 4 B25G	2	159	170	175	186	274
51	1030	28,78	19000	2,6							
55	955	26,5	18700	3,5							
62	847	23,68	18300	4							
30	1750	48,37	13900	1	iP 773 – HB3 132 S 4 B20G	3	119	130	130	141	272
34	1540	43,58	15300	1,1							
38	1380	38,23	16500	1,25							
44	1190	33,74	17400	1,4							
49	1070	29,91	18000	1,5							
58	906	25,54	18600	1,65							
58	906	25,5 (1)	18600	1,85	iP 772 – HB3 132 S 4 B20G	2	117	128	128	139	272
69	761	21,43	19100	2,2							
75	700	19,7	19200	2,4							
84	625	17,49	19400	2,7							
94	559	15,64 (1)	19600	3							
105	500	14,06	19200	3,4							
120	438	12,2	18500	3,9							

(1) Finite transmission ratio *i*

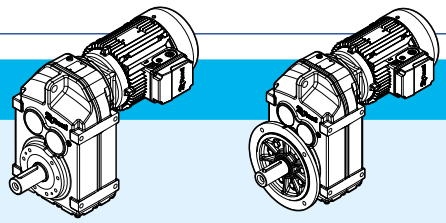

P_1 = 5,5 kW

n_2 min^{-1}	M_2 N m	i	F_{r2} N	fs			kg foot HB	kg foot HBZ	kg flange HB	kg flange HBZ	p.
67	784	22,05	10500	1,05	**iP 672 – HB3 132 S 4 B16G**	2	93	104	99	110	270
70	750	20,9 (1)	10900	1,1							
80	657	18,29	11600	1,25							
89	590	16,48	11900	1,4							
102	515	14,46	12300	1,6							
115	457	12,76	12600	1,8							
130	404	11,31	12800	2							
152	346	9,66	12900	2,4							
162	324	9,08	12400	1,85							
171	307	8,6	12200	2							
195	269	7,53	11900	2,6							
217	242	6,78	11600	2,8							
247	213	5,95	11300	3,2							
280	188	5,25	11000	3,6							
316	166	4,66	10700	3,8							
370	142	3,97	10300	3,9							
87	604	16,81	5460	1	**iP 572 – HB3 132 S 4 B16G**	2	88	99	95	106	268
93	565	15,88	5490	1,05							
109	482	13,52	5530	1,25							
120	438	12,29	5530	1,35							
138	381	10,64	5500	1,6							
179	293	8,19	5180	1,55							
190	276	7,73	5150	1,65							
223	236	6,58	5060	2							
246	214	5,98	4990	2,2							
284	185	5,18	4880	2,5							

P_1 = 7,5 kW

15	4780	97,58	24600	1	**iP 973 – HB3 132 M 4 B30G**	3	233	244	265	276	276
16	4480	89,85	29600	1,1							
17	4210	86,59	30100	1,15							
18	3980	80,31	31000	1,2							
19	3770	75,63	31600	1,3							
20	3580	72,29	32000	1,35							
22	3260	65,47	32200	1,5							
25	2870	58,06	31700	1,65							
28	2560	52,49	31300	1,85							
33	2170	44,49	30500	2,2							
38	1880	38,86	29800	2,5							
45	1590	32,5	28800	2,9							
34	2110	43,28	30400	1,6	**iP 972 – HB3 132 M 4 B30G**	2	234	245	266	277	276
40	1790	36,64	29500	1,9							
43	1670	33,91	29000	2,8							
48	1490	30,39	28400	3,1							

(1) Finite transmission ratio *i*

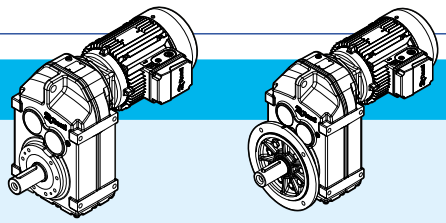

P_1 = 7,5 kW

n_2 min^{-1}	M_2 N m	i	F_{r2} N	fs			kg foot HB	kg foot HBZ	kg flange HB	kg flange HBZ	p.
26	2750	56,75	18100	1,2	**iP 873 – HB3 132 M 4 B25G**	3	171	182	187	198	274
29	2470	50,36	18200	1,3							
32	2240	45,28	18200	1,4							
37	1940	39,3	18100	1,6							
41	1750	35,19	17900	1,7							
50	1430	29,2	17600	1,95							
51	1400	28,78	17500	1,95	**iP 872 – HB3 132 M 4 B25G**	2	167	178	183	194	274
55	1300	26,5	17400	2,6							
62	1160	23,68	17100	2,9							
68	1050	21,32 (1)	16800	3,2							
76	942	19,31	16500	3,5							
85	843	17,12	16100	4							
94	762	15,48	15800	4,4							
43	1670	33,74	14700	1	**iP 773 – HB3 132 M 4 B20G**	3	127	138	138	149	272
49	1460	29,91	16000	1,1							
57	1260	25,54	17200	1,2							
57	1260	25,5 (1)	17200	1,35	**iP 772 – HB3 132 M 4 B20G**	2	125	136	136	147	272
68	1050	21,43	18100	1,6							
74	968	19,7	18500	1,75							
83	863	17,49	18800	2							
93	770	15,64 (1)	18900	2,2							
104	689	14,06	18500	2,5							
120	597	12,2	17900	2,8							
134	535	10,93	17500	3,2							
157	456	9,3	16400	2,7							
177	405	8,26	16000	3							
198	362	7,39	15600	3,4							
220	326	6,64	15300	3,7							
253	283	5,76	14800	4,3							
283	253	5,16	14400	4,8							
341	210	4,28	13700	5,2							

P_1 = 9,2 kW

18	4880	80,31	23100	1	**iP 973 – HB3 132 MB 4 B30H**	3	235	247	267	279	276
19	4620	75,63	29200	1,05							
20	4390	72,29	29600	1,1							
22	3990	65,47	29600	1,2							
25	3510	58,06	29500	1,35							
28	3140	52,49	29300	1,5							
33	2660	44,49	28800	1,75							
38	2310	38,86	28300	2							
45	1950	32,5	27500	2,4							
43	2040	33,91	27700	2,3	**iP 972 – HB3 132 MB 4 B30H**	2	237	249	269	281	276
48	1830	30,39	27200	2,6							
53	1660	27,44 (1)	26700	2,8							
59	1490	24,92	26200	3,1							

(1) Finite transmission ratio *i*

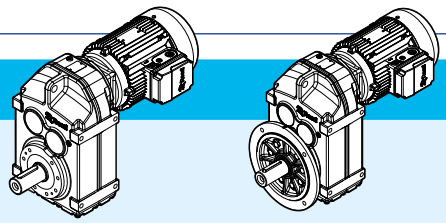

P_1 = 9,2 kW

n_2 min^{-1}	M_2 N m	i	F_{r2} N	fs			kg foot HB	kg foot HBZ	kg flange HB	kg flange HBZ	p.
29	3030	50,36	16000	1,05	**iP 873 – HB3 132 MB 4 B25H**	3	174	186	190	202	274
32	2750	45,28	16300	1,15							
37	2370	39,3	16400	1,3							
41	2140	35,19	16400	1,35							
50	1760	29,2	16300	1,6							
55	1600	26,5	16200	2,1	**iP 872 – HB3 132 MB 4 B25H**	2	169	181	185	197	274
62	1420	23,68	16000	2,4							
68	1290	21,32 (1)	15900	2,6							
76	1160	19,31	15600	2,9							
85	1030	17,12	15400	3,3							
94	935	15,48	15100	3,6							
111	792	13,12 (1)	14600	4,2							
74	1190	19,7	17600	1,45	**iP 772 – HB3 132 MB 4 B20H**	2	127	139	138	150	272
83	1060	17,49	18100	1,6							
93	945	15,64 (1)	18200	1,8							
104	845	14,06	17900	2							
120	732	12,2	17400	2,3							
134	656	10,93	17100	2,6							
157	560	9,3	15900	2,2							
177	496	8,26	15600	2,5							
198	444	7,39	15200	2,7							
220	399	6,64	14900	3,1							
253	347	5,76	14500	3,5							
283	310	5,16	14100	3,9							
341	258	4,28	13500	4,2							

P_1 = 11 kW

22	4780	65,47	26900	1	**iP 973 – HB3 160 M 4 B30H**	3	183	183	215	215	276
25	4200	58,06	27100	1,15							
28	3750	52,49	27100	1,25							
33	3180	44,49	26900	1,5							
38	2760	38,86	26700	1,7							
45	2330	32,5	26200	2							
43	2440	33,91	26300	1,95	**iP 972 – HB3 160 M 4 B30H**	2	184	184	216	216	276
48	2190	30,39	25900	2,2							
54	1950	27,44 (1)	25500	2,4							
59	1780	24,92	25200	2,6							
66	1590	22,11	24600	2,9							
37	2840	39,3	14600	1,1	**iP 873 – HB3 160 M 4 B25H**	3	119	119	136	136	274
42	2500	35,19	14800	1,15							
50	2100	29,2	15000	1,35							

(1) Finite transmission ratio *i*

iP

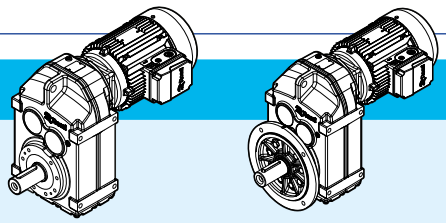

P_1 = 11 kW

n_2 min^{-1}	M_2 N m	i	F_{r2} N	fs			kg foot HB	kg foot HBZ	kg flange HB	kg flange HBZ	p.
55	1910	26,5	15000	1,75	**iP 872 – HB3 160 M 4 B25H**	2	115	115	131	131	274
62	1690	23,68	15000	2							
69	1520	21,32 (1)	14900	2,2							
76	1380	19,31	14800	2,4							
86	1220	17,12	14600	2,7							
95	1110	15,48	14400	3							
112	938	13,12 (1)	14000	3,6							
75	1400	19,7	16300	1,2	**iP 772 – HB3 160 M 4 B20H**	2	71	71	82	82	272
84	1250	17,49	17200	1,35							
94	1120	15,64 (1)	17600	1,5							
105	1000	14,06	17300	1,7							
120	875	12,2	16900	1,95							
135	778	10,93	16600	2,2							
158	665	9,3	15400	1,85							
178	590	8,26	15100	2,1							
199	528	7,39	14800	2,3							
221	475	6,64	14500	2,6							
255	412	5,76	14100	3							
285	369	5,16	13800	3,3							
343	306	4,28	13300	3,6							

P_1 = 15 kW

33	4340	44,49	22900	1,1	**iP 973 – HB3 160 L 4 B30H**	3	183	183	215	215	276
38	3770	38,86	23100	1,25							
45	3180	32,5	23200	1,5							
43	3330	33,91	23200	1,4	**iP 972 – HB3 160 L 4 B30H**	2	184	184	216	216	276
48	2980	30,39	23200	1,6							
54	2650	27,44 (1)	23000	1,75							
59	2430	24,92	22900	1,9							
66	2170	22,11	22600	2,1							
73	1960	20,07	22400	2,4							
85	1690	17,25 (1)	21900	2,7							
98	1460	15,06	21400	3,1							
115	1250	12,77	20800	3,7							
132	1090	11,16	20200	4,2							
55	2600	26,5	12400	1,3	**iP 872 – HB3 160 L 4 B25H**	2	115	115	131	131	274
62	2310	23,68	12600	1,45							
69	2080	21,32 (1)	12800	1,6							
76	1880	19,31	12800	1,8							
86	1670	17,12	12900	2							
95	1510	15,48	12800	2,2							
112	1280	13,12 (1)	12700	2,6							
128	1120	11,46	12600	3							
153	936	9,58	12300	3,5							

(1) Finite transmission ratio *i*

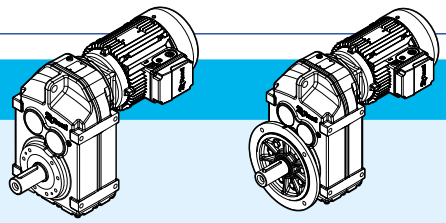

P_1 = 15 kW

n_2 min^{-1}	M_2 N m	i	F_{r2} N	fs			kg foot HB	kg foot HBZ	kg flange HB	kg flange HBZ	p.
177	809	8,29	11700	2,1	**iP 872 – HB3 160 L 4 B25H**	2	115	115	131	131	274
200	716	7,35	11500	2,4							
221	648	6,65	11300	2,6							
261	549	5,63	11000	3,1							
299	479	4,92	10700	3,5							
357	401	4,12	10300	4,1							

P_1 = 18,5 kW

38	4650	38,86	20100	1	**iP 973 – HB3 180 M 4 B30L**	3	183	183	215	215	276
45	3930	32,5	20600	1,2							
53	3330	27,44 (1)	20900	1,4	**iP 972 – HB3 180 M 4 B30L**	2	184	184	216	216	276
59	2990	24,92	20900	1,55							
66	2680	22,11	20900	1,75							
73	2420	20,07	20800	1,9							
85	2080	17,25 (1)	20500	2,2							
97	1820	15,06	20200	2,5							
115	1540	12,77	19700	3							
131	1350	11,16	19300	3,4							
69	2560	21,32 (1)	10900	1,3	**iP 872 – HB3 180 M 4 B25L**	2	115	115	131	131	274
76	2320	19,31	11100	1,45							
86	2050	17,12	11400	1,6							
95	1860	15,48	11500	1,8							
112	1580	13,12 (1)	11600	2,1							
128	1380	11,46	11600	2,4							
153	1150	9,58	11500	2,8							
177	998	8,29	10900	1,7							
199	888	7,35	10800	1,9							
220	803	6,65	10700	2,1							
260	680	5,63	10400	2,5							
298	593	4,92	10200	2,9							
356	496	4,12	9890	3,3							

P_1 = 22 kW

54	3890	27,44 (1)	18700	1,2	**iP 972 – HB3 180 L 4 B30L**	2	184	184	216	216	276
59	3560	24,92	18900	1,3							
66	3180	22,11	19100	1,45							
73	2880	20,07	19200	1,6							
85	2470	17,25 (1)	19100	1,85							
98	2140	15,06	19000	2,1							
115	1830	12,77	18700	2,5							
132	1590	11,16	18400	2,8							

(1) Finite transmission ratio *i*

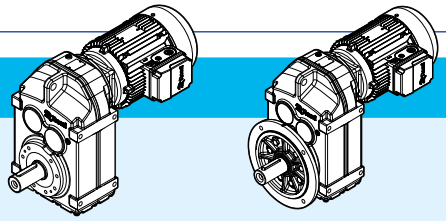

P_1 = 22 kW

n_2 min^{-1}	M_2 N m	i	F_{r2} N	fs			kg foot HB	kg foot HBZ	kg flange HB	kg flange HBZ	p.
69	3040	21,32 (1)	9030	1,1	**iP 872 – HB3 180 L 4 B25L**	2	115	115	131	131	274
76	2760	19,31	9460	1,2							
86	2440	17,12	9870	1,35							
95	2210	15,48	10100	1,5							
112	1880	13,12 (1)	10400	1,8							
128	1640	11,46	10600	2							
153	1370	9,58	10600	2,4							
177	1190	8,29	10100	1,45							
200	1050	7,35	10100	1,6							
221	951	6,65	10000	1,8							
261	805	5,63	9890	2,1							
299	703	4,92	9740	2,4							
357	589	4,12	9490	2,8							

P_1 = 30 kW

66	4340	22,11	15100	1,05	**iP 972 – HB3 200 L 4 B30M**	2	190	190	222	222	276
73	3920	20,07	15500	1,2							
85	3370	17,25 (1)	16000	1,35							
98	2920	15,06	16300	1,55							
115	2490	12,77	16400	1,85							
132	2170	11,16	16400	2,1							
162	1770	9,06	15400	1,5							
179	1600	8,22	15300	1,65							
208	1380	7,07	15100	1,9							
238	1200	6,17	14900	2,1							
281	1020	5,23	14600	2,4							
321	893	4,57	14300	2,6							

(1) Rapporto di trasmissione *i* finito

page intentionally left blank

14

Parallel shaft helical Dimensional drawings - iP

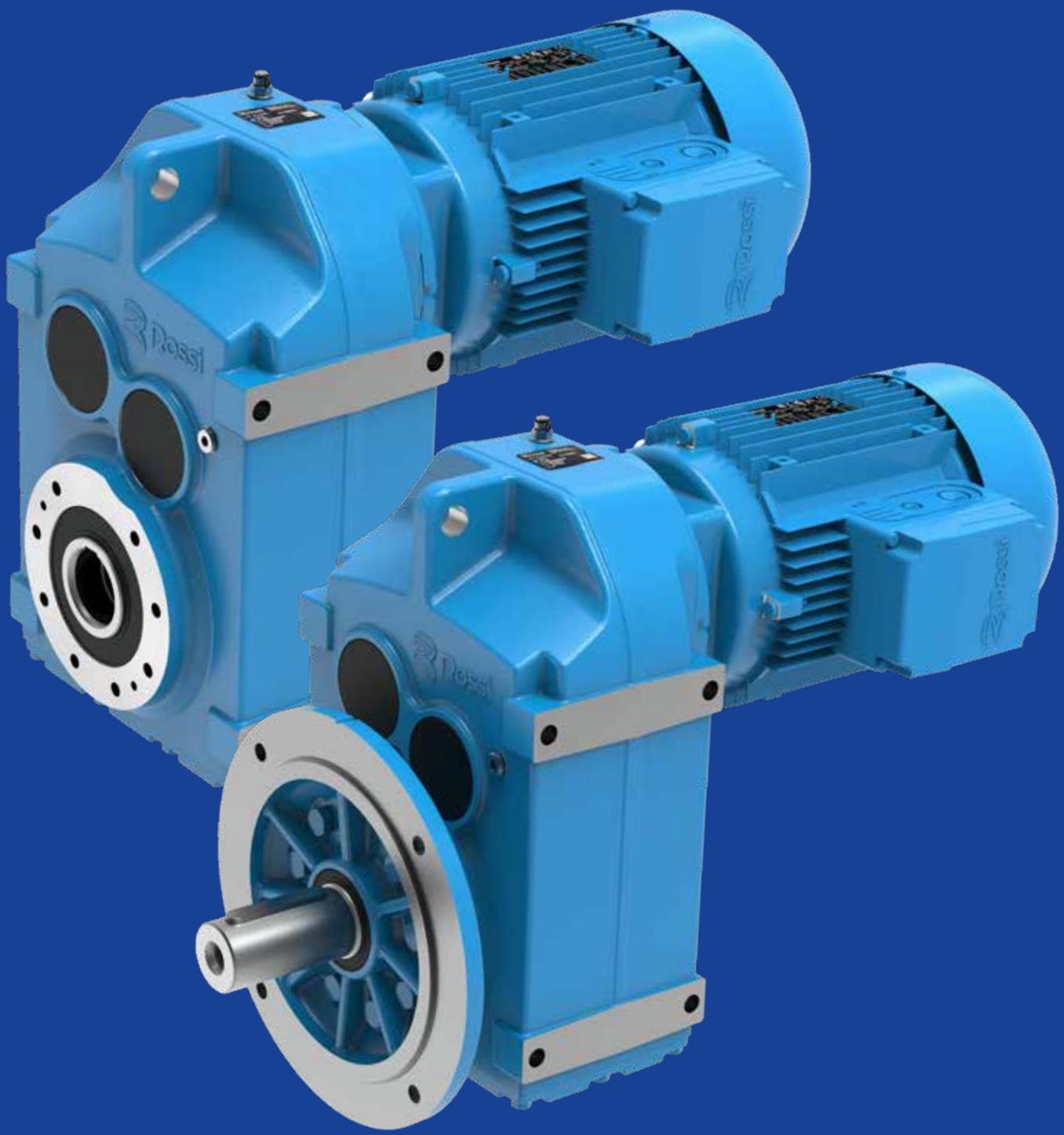

Section contents

14.1	iP 27...	262
14.2	iP 37...	264
14.3	iP 47...	266
14.4	iP 57...	268
14.5	iP 67...	270
14.6	iP 77..	272
14.7	iP 87...	274
14.8	iP 97...	276

14.1

iP 27...PE

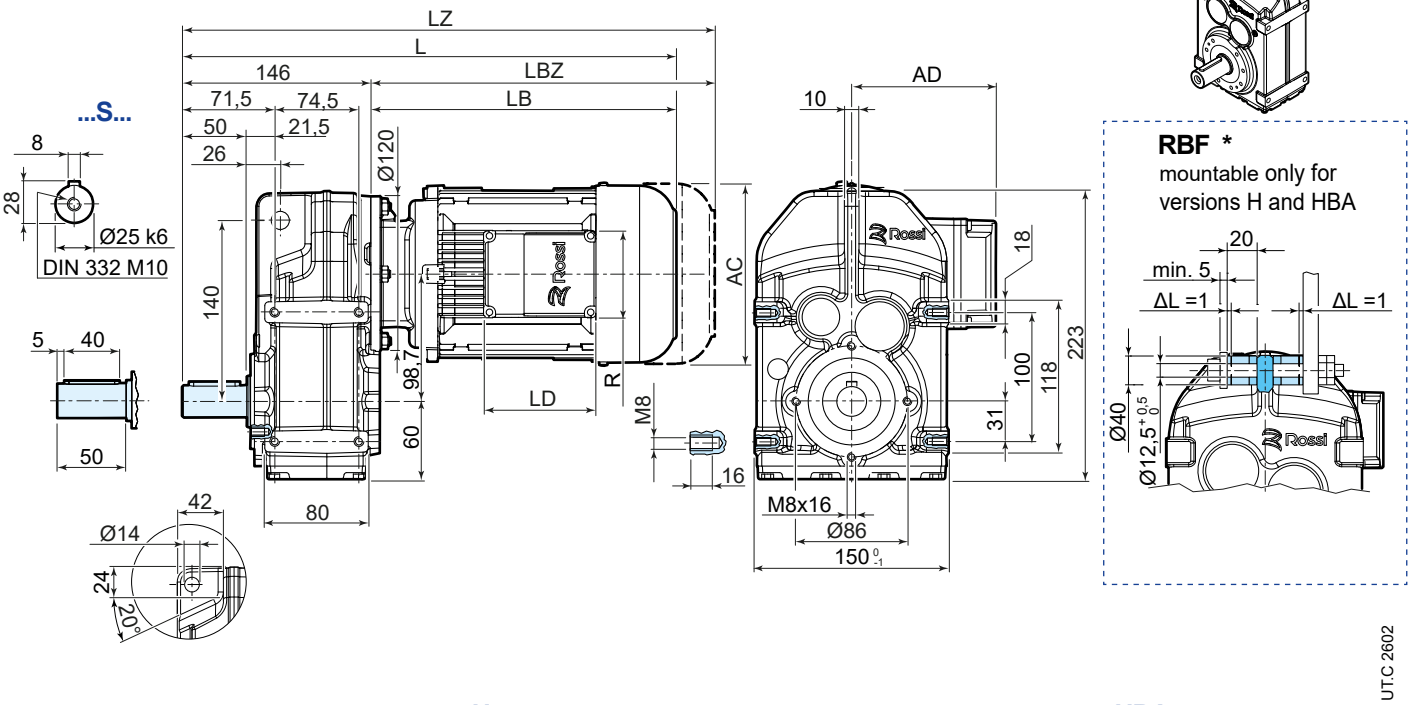

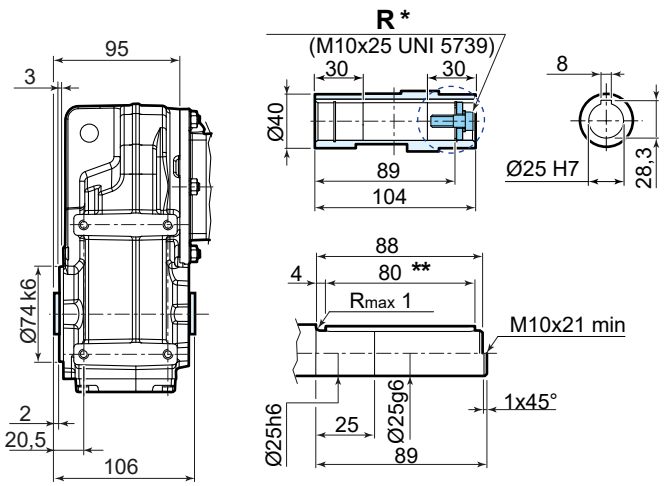

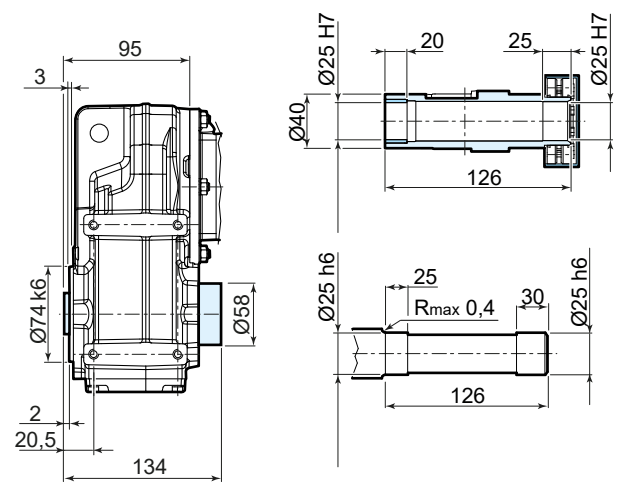

	63	71	80	90S [2]	90L
AC	123	138	156	176	176
AD	95	112	121	141	141
LB	211	237	260	290	320
LBZ	266	299	335	369	399
L [1]	357	383	406	436	466
LZ [1]	412	445	481	515	545
LD	103	103	103	136	136
R	86	86	86	106	106

223
83
278

[1] See also pages 90, 91
[2] For motors HB3-HB3Z 90S 2, HB3-HB3Z 90S 4, HB3-HB3Z 90S 6 dimensions as motor size 90L

* options on request
** both version with key

iP 27... FE

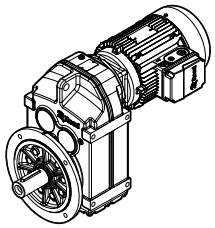

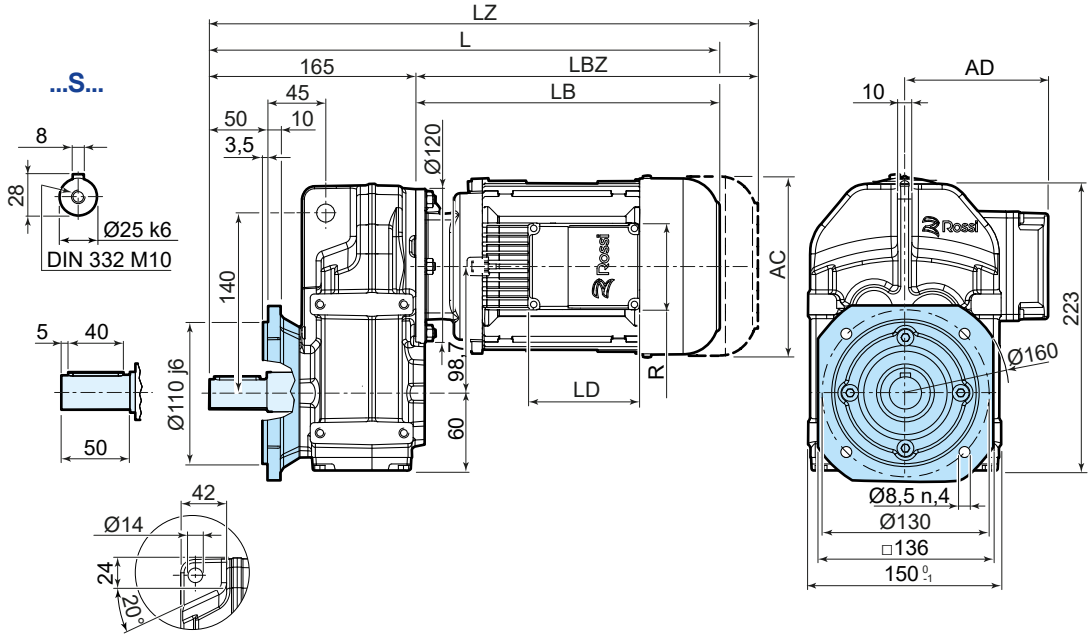

UT.C 2603

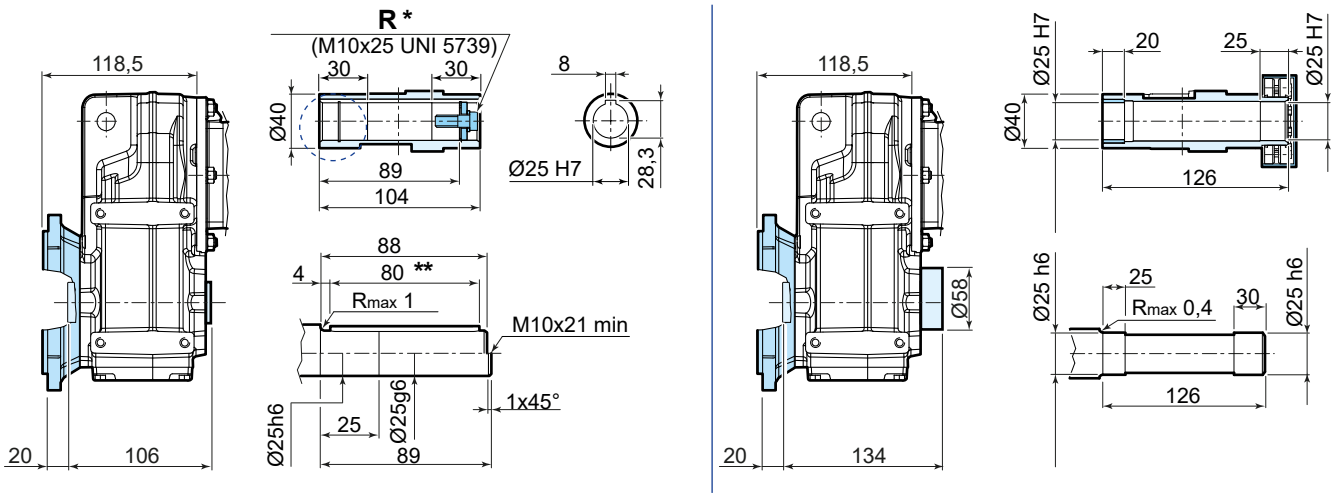

	63	71	80	90S [2]	90L
AC	123	138	156	176	176
AD	95	112	121	141	141
LB	211	237	260	290	320
LBZ	266	299	335	369	399
L [1]	376	402	425	455	485
LZ [1]	431	464	500	534	564
LD	103	103	103	136	136
R	86	86	86	106	106

223
83
278

[1] See also pages 90, 91
[2] For motors HB3-HB3Z 90S 2, HB3-HB3Z 90S 4, HB3-HB3Z 90S 6 dimensions as motor size 90L

* options on request
** both version with key

14.2

iP 37...PE

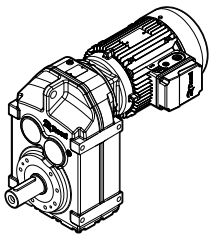

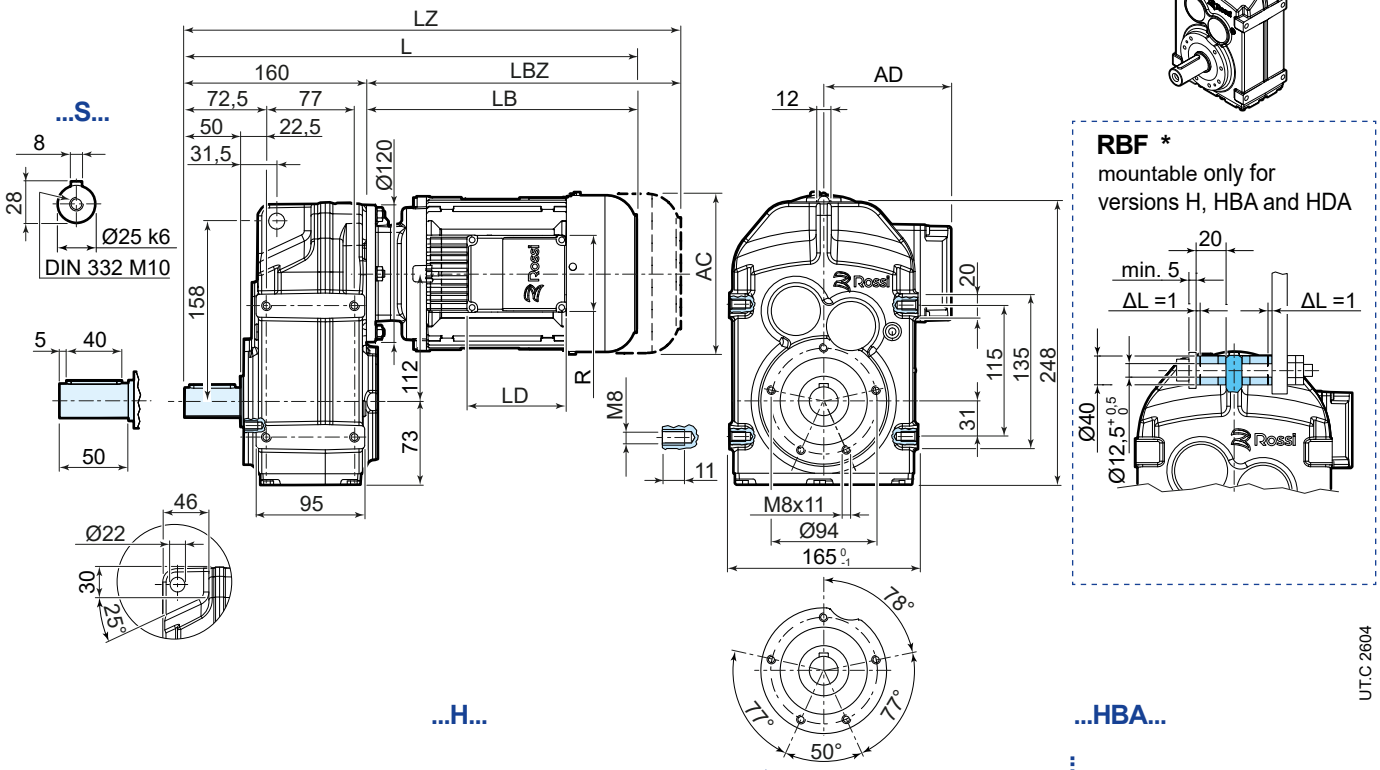

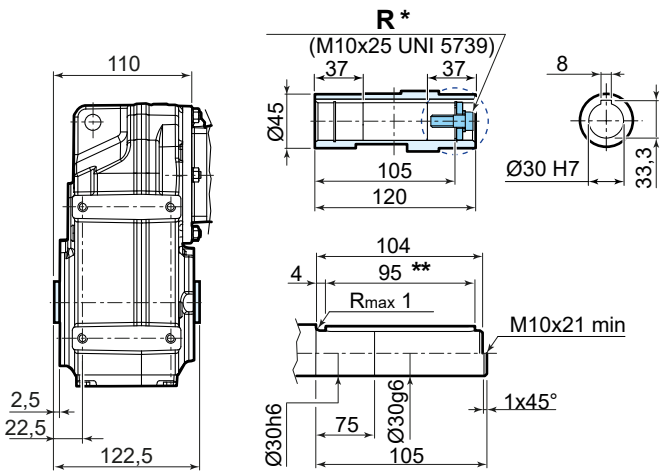

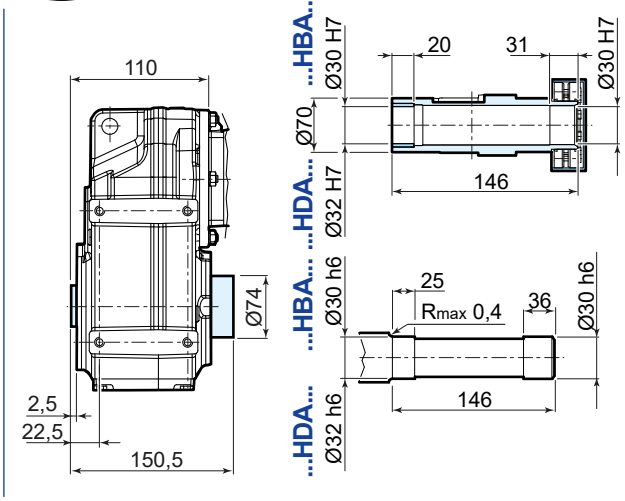

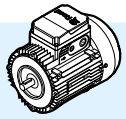

	63	71	80	90S [2]	90L	100
AC	123	138	156	176	176	194
AD	95	112	121	141	141	151
LB	211	237	260	290	320	351
LBZ	266	299	335	369	399	446
L [1]	371	397	420	450	480	511
LZ [1]	531	557	495	610	640	671
LD	103	103	103	136	136	136
R	86	86	86	106	106	106

223
83
278

[1] See also pages 90, 91
[2] For motors HB3-HB3Z 90S 2, HB3-HB3Z 90S 4, HB3-HB3Z 90S 6 dimensions as motor size 90L

* options on request
** both version with key

iP 37... FE

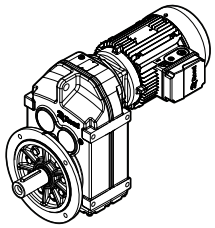

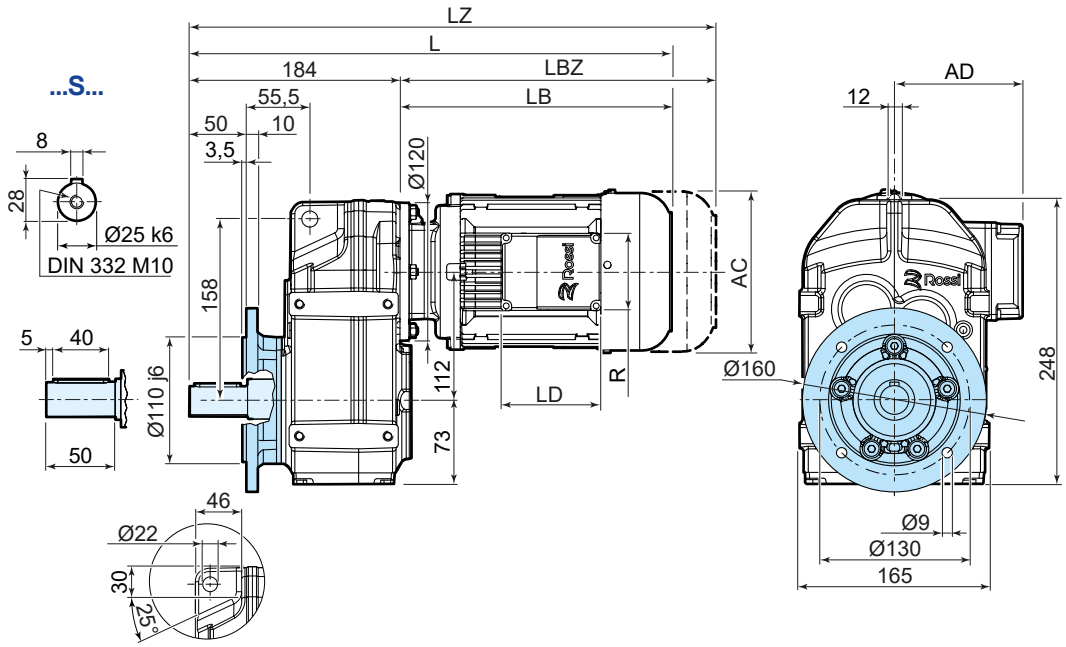

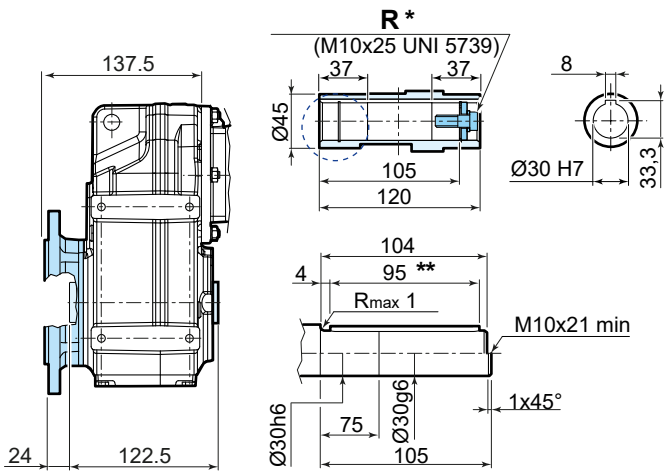

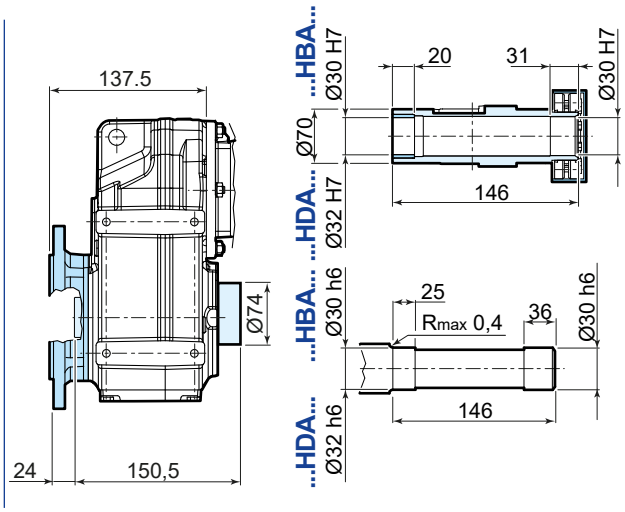

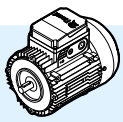

	63	71	80	90S [2]	90L	100
AC	123	138	156	176	176	194
AD	95	112	121	141	141	151
LB	211	237	260	290	320	351
LBZ	266	299	335	369	399	446
L [1]	395	421	444	474	504	535
LZ [1]	579	605	628	658	688	719
LD	103	103	103	136	136	136
R	86	86	86	106	106	106

[1] See also pages 90, 91
[2] For motors HB3-HB3Z 90S 2, HB3-HB3Z 90S 4, HB3-HB3Z 90S 6 dimensions as motor size 90L

223
83
278
FB14 88

* options on request
** both version with key

iP

14.3

iP 47...PE

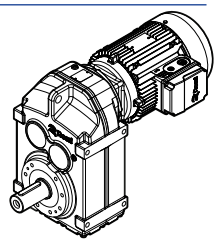

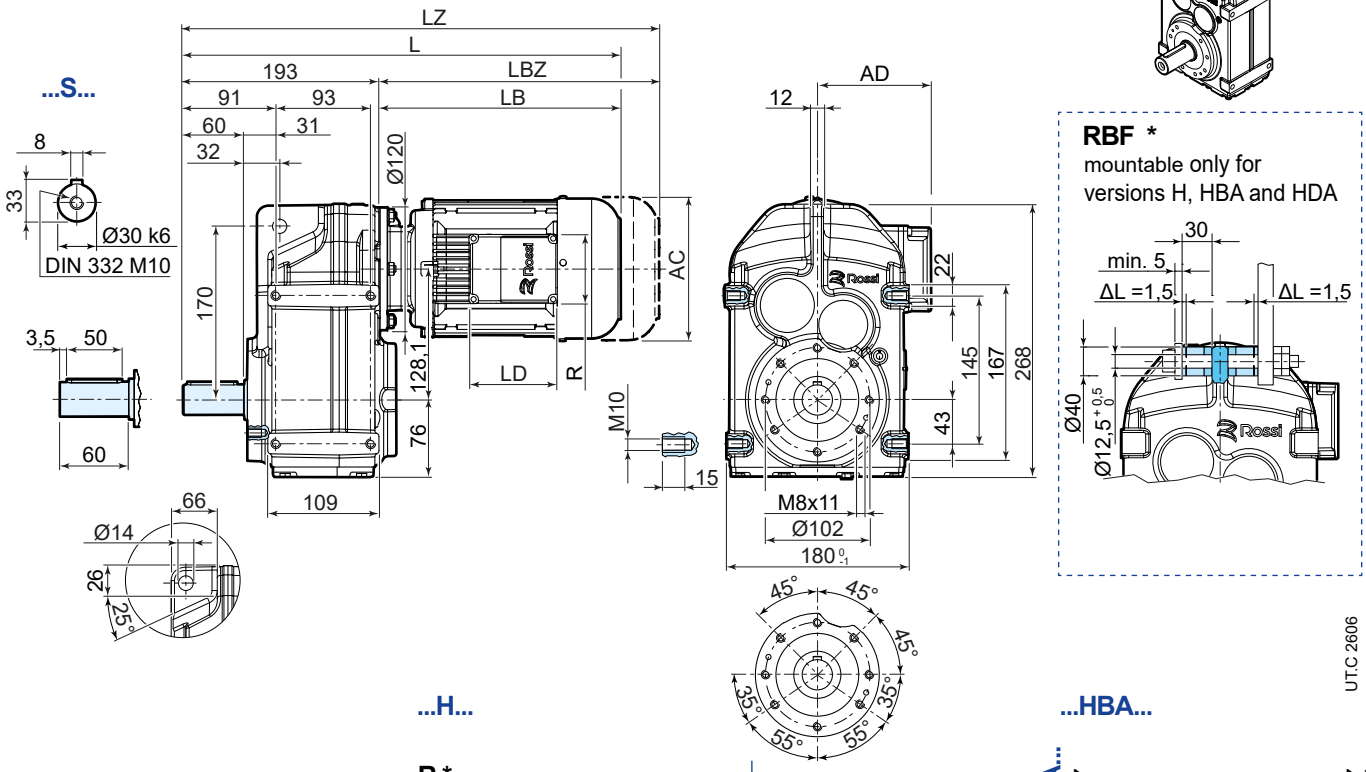

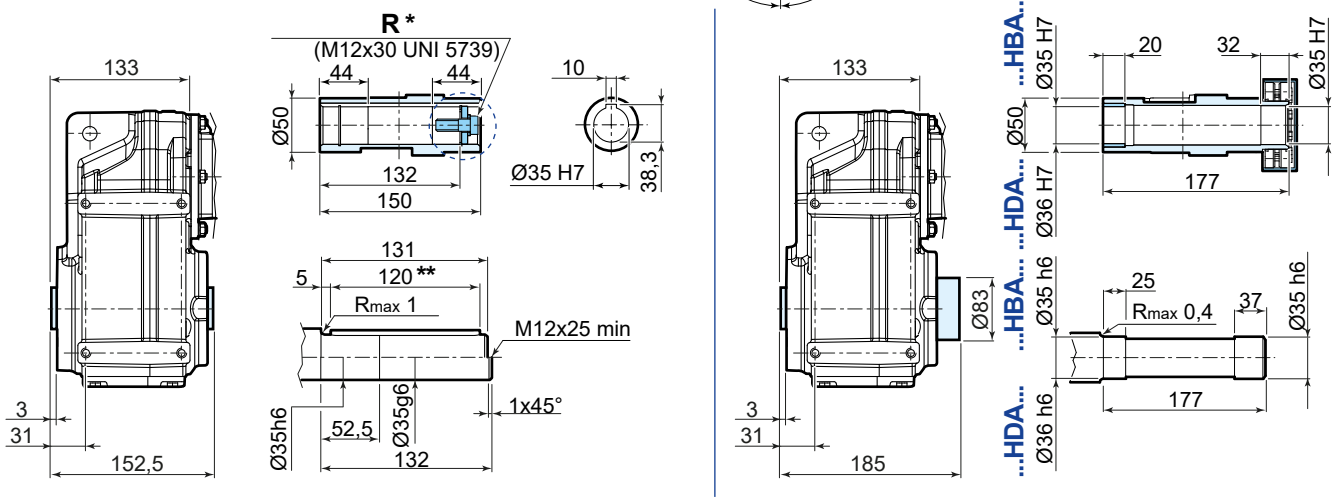

	63	71	80	90S [2]	90L	100
AC	123	138	156	176	176	194
AD	95	112	121	141	141	151
LB	211	237	260	290	320	351
LBZ	266	299	335	369	399	446
L [1]	404	430	453	483	513	544
LZ [1]	459	492	528	562	592	639
LD	103	103	103	136	136	136
R	86	86	86	106	106	106

223
83
278

[1] See also pages 90, 91
[2] For motors HB3-HB3Z 90S 2, HB3-HB3Z 90S 4, HB3-HB3Z 90S 6 dimensions as motor size 90L

* options on request
** both version with key

iP 47... FE

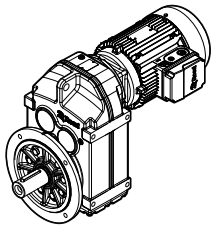

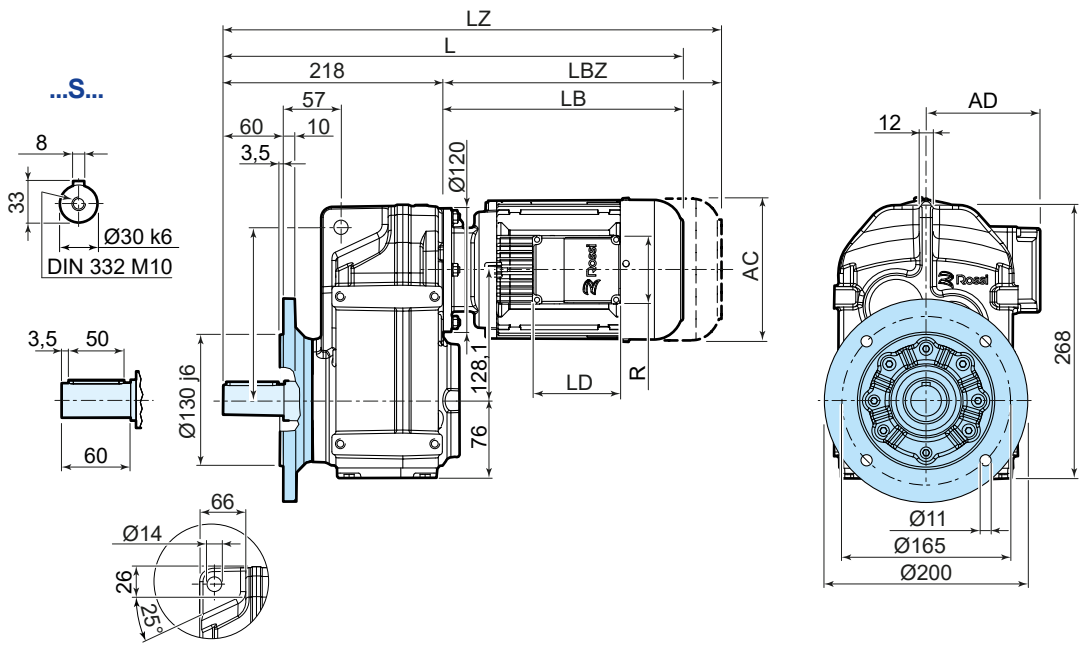

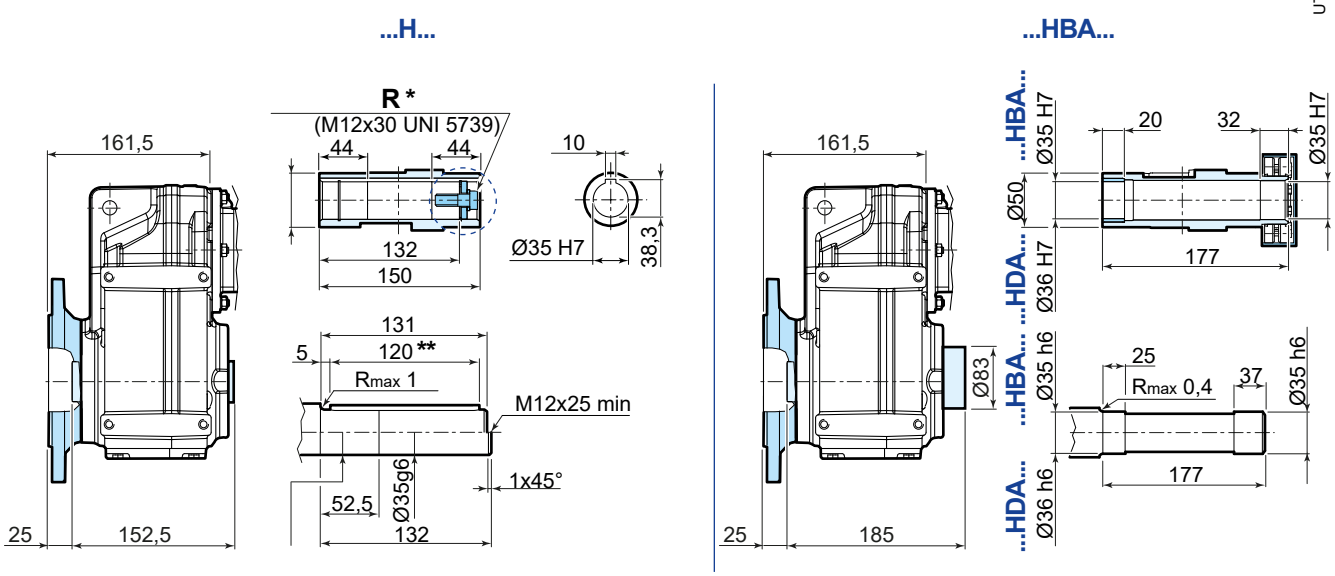

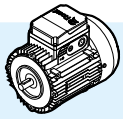	63	71	80	90S [2]	90L	100
AC	123	138	156	176	176	194
AD	95	112	121	141	141	151
LB	211	237	260	290	320	351
LBZ	266	299	335	369	399	446
L [1]	429	455	478	508	538	569
LZ [1]	484	517	553	587	617	664
LD	103	103	103	136	136	136
R	86	86	86	106	106	106

[1] See also pages 90, 91
[2] For motors HB3-HB3Z 90S 2, HB3-HB3Z 90S 4, HB3-HB3Z 90S 6 dimensions as motor size 90L

223
83
278
FB14 88

* options on request
** both version with key

iP

14.4

iP 57...PE

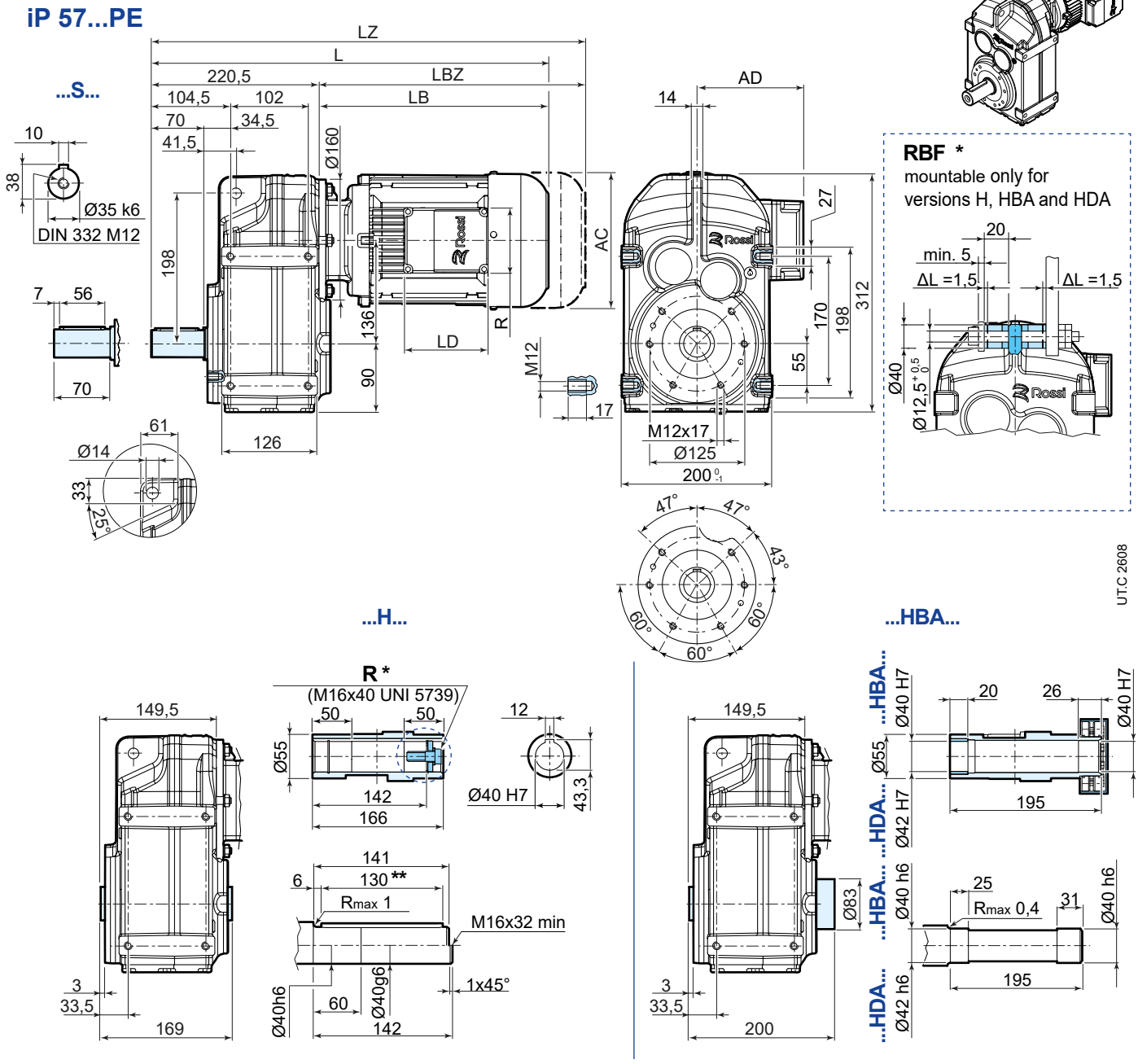

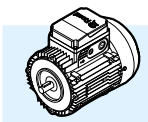

	63	71	80	90S [2]	90L	100	112
AC	123	138	156	176	176	194	218
AD	95	112	121	141	141	151	163
LB	211	237	260	290	320	351	389
LBZ	266	299	335	369	399	446	488
L [1]	431,5	457,5	480,5	510,5	540,5	571,5	609,5
LZ [1]	486,5	519,5	555,5	589,5	619,5	666,5	708,5
LD	103	103	103	136	136	136	136
R	86	86	86	106	106	106	106

223
83
278

[1] See also pages 90, 91
[2] For motors HB3-HB3Z 90S 2, HB3-HB3Z 90S 4, HB3-HB3Z 90S 6 dimensions as motor size 90L

* options on request
** both version with key

iP 57... FE

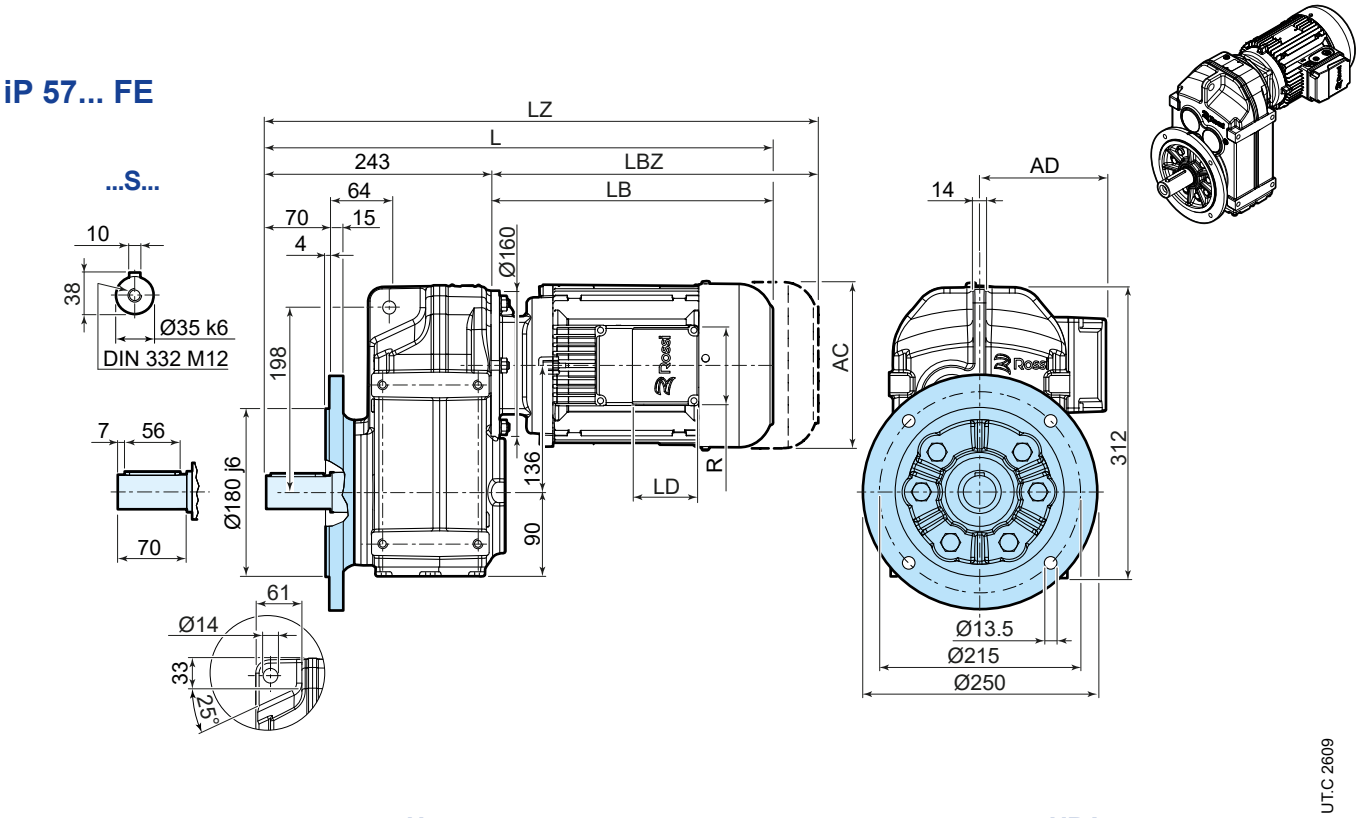

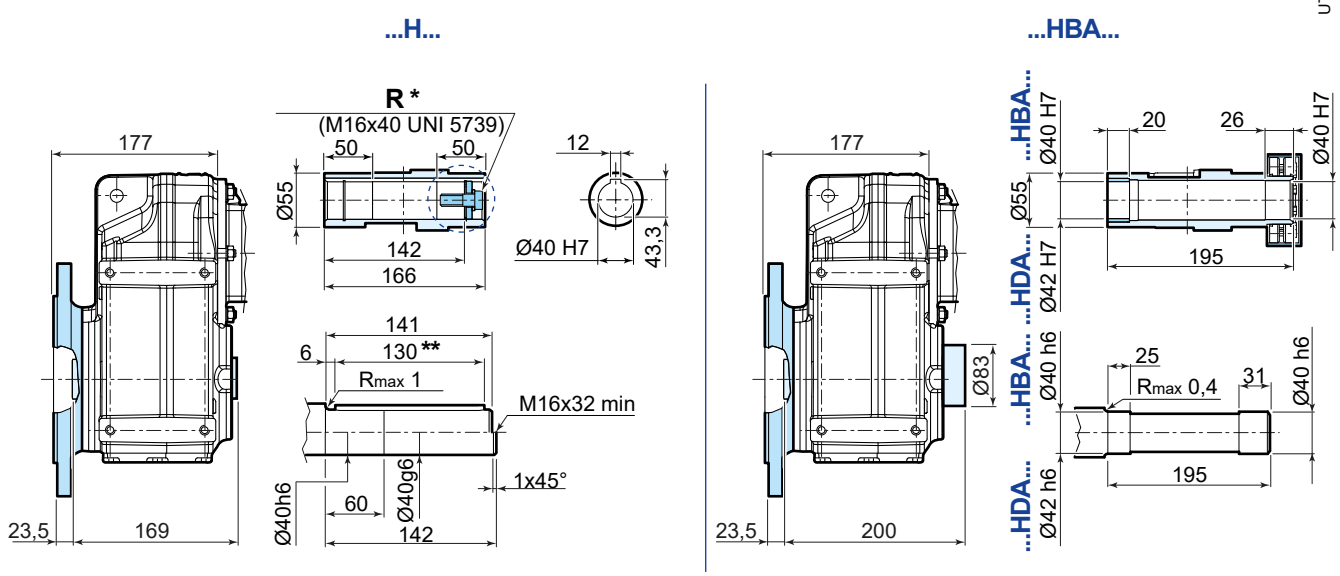

	63	71	80	90S [2]	90L	100	112
AC	123	138	156	176	176	194	218
AD	95	112	121	141	141	151	163
LB	211	237	260	290	320	351	389
LBZ	266	299	335	369	399	446	488
L [1]	454	480	503	533	563	594	632
LZ [1]	509	542	578	612	642	689	731
LD	103	103	103	136	136	136	136
R	86	86	86	106	106	106	106

223
83
278
FB14
88

[1] See also pages 90, 91
[2] For motors HB3-HB3Z 90S 2, HB3-HB3Z 90S 4, HB3-HB3Z 90S 6 dimensions as motor size 90L

* options on request
** both version with key

14.5

iP 67...PE

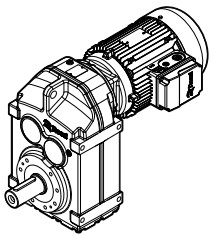

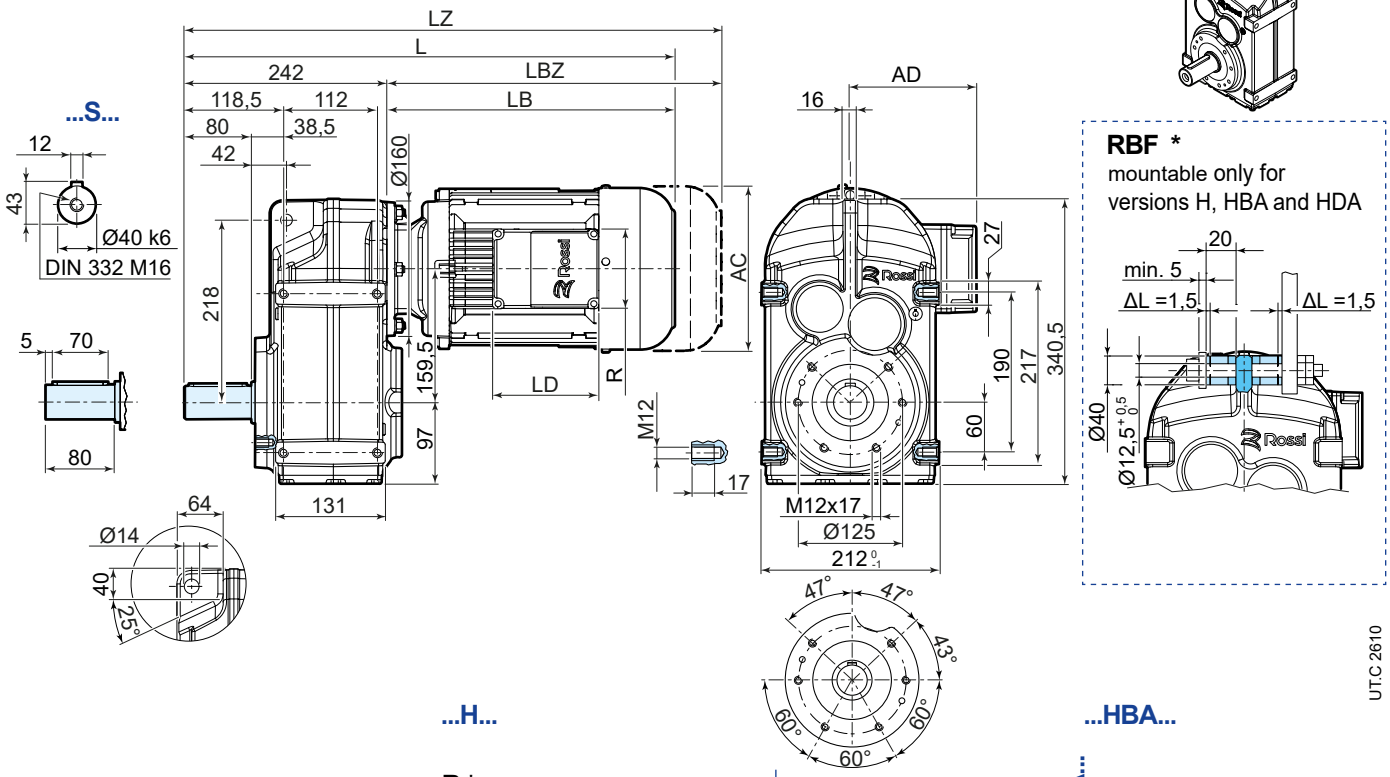

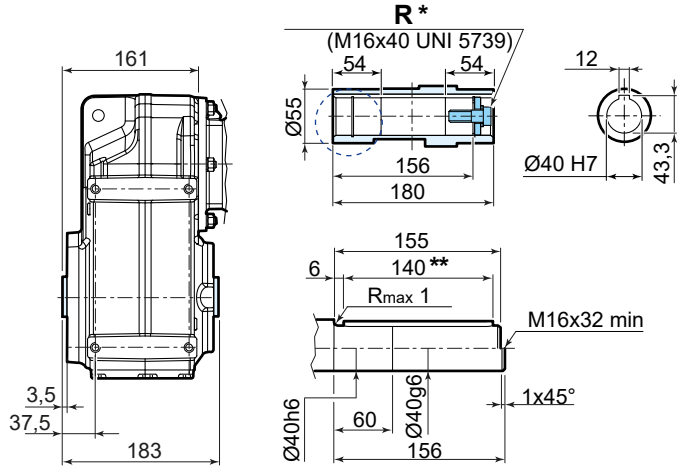

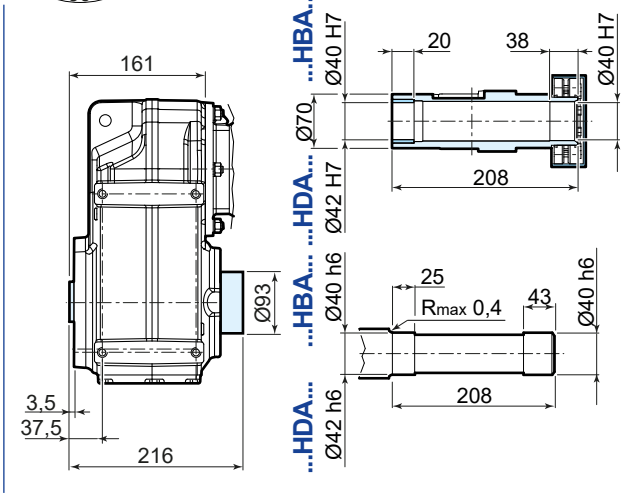

	63	71	80	90S [2]	90L	100	112	132S [3]	132M
AC	123	138	156	176	176	194	218	257	257
AD	95	112	121	141	141	151	163	194	194
LB	205	231	260	283	313	345	383	439	499
LBZ	260	293	329	362	392	440	482	547	607
L [1]	447	473	502	525	555	587	625	681	741
LZ [1]	502	535	571	604	634	682	724	789	849
LD	103	103	103	136	136	136	136	190	190
R	86	86	86	106	106	106	106	148	148

223
83
278

[1] See also pages 90, 91
[2] For motors HB3-HB3Z 90S 2, HB3-HB3Z 90S 4, HB3-HB3Z 90S 6 dimensions as motor size 90L
[3] For motors HB3-HB3Z 132SB 2, HB3-HB3Z 132SC 2, HB3-HB3Z 132S 4 dimensions as motor size 132M

* options on request
** both version with key

iP 67... FE

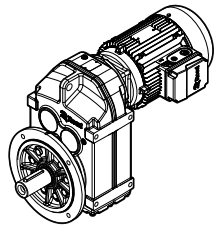

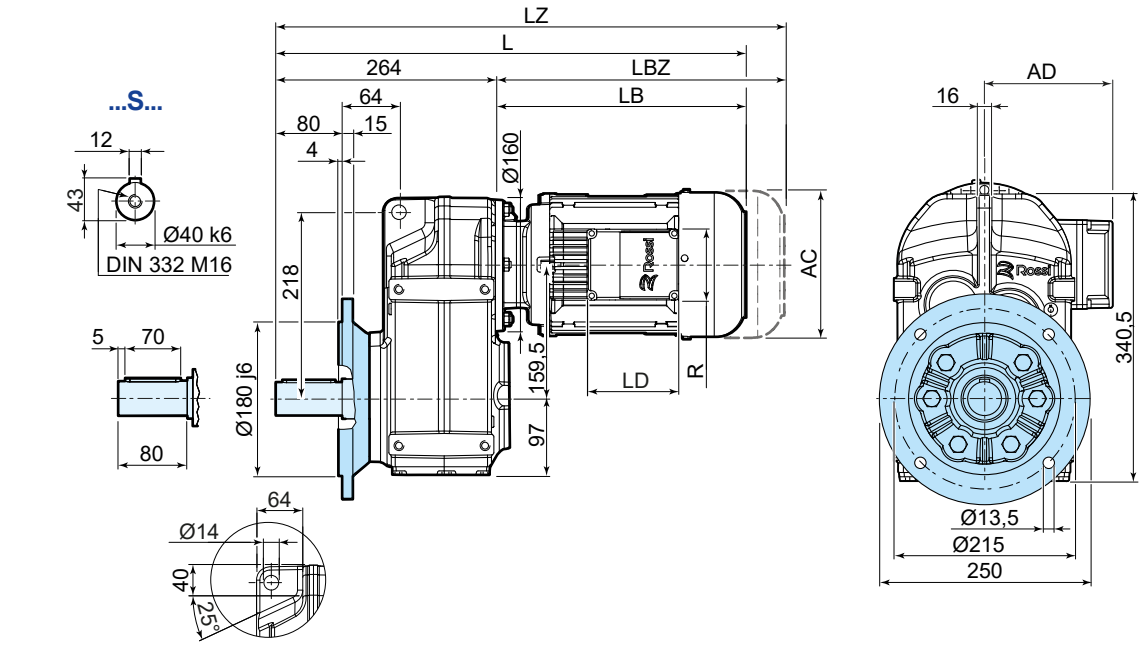

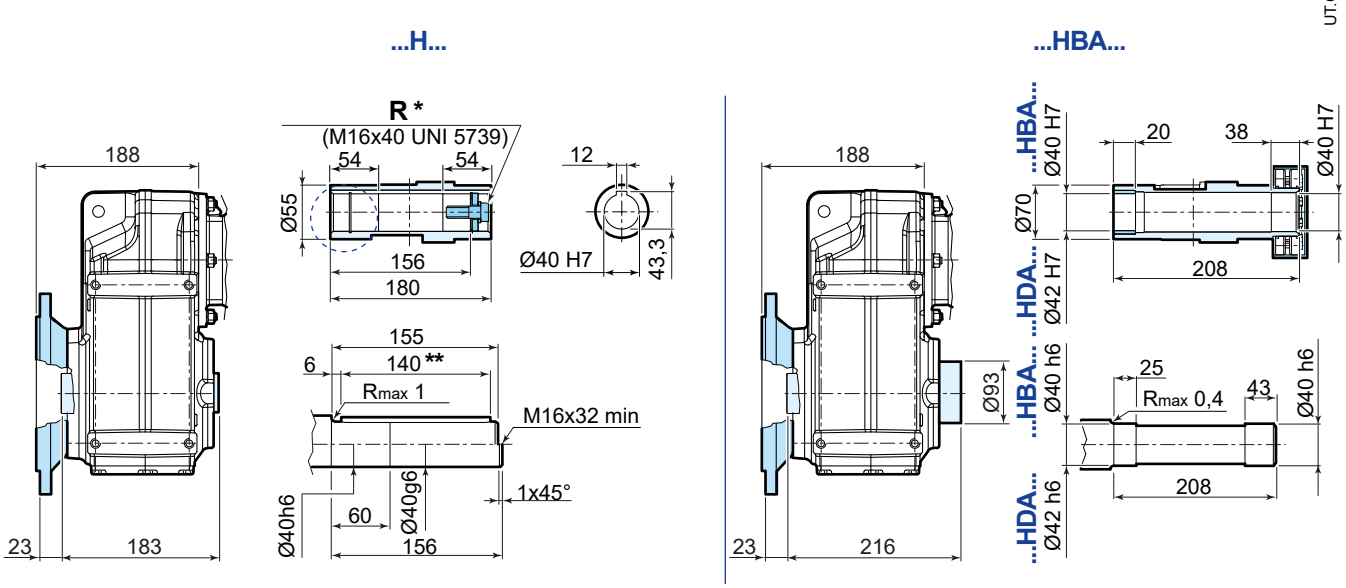

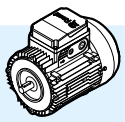

	63	71	80	90S [2]	90L	100	112	132S [3]	132M
AC	123	138	156	176	176	194	218	257	257
AD	95	112	121	141	141	151	163	194	194
LB	205	231	260	283	313	345	383	439	499
LBZ	260	293	329	362	392	440	482	547	607
L [1]	469	495	524	547	577	609	647	703	763
LZ [1]	524	557	593	626	656	704	746	811	871
LD	103	103	103	136	136	136	136	190	190
R	86	86	86	106	106	106	106	148	148

223
83
278
FB14 88

[1] See also pages 90, 91
[2] For motors HB3-HB3Z 90S 2, HB3-HB3Z 90S 4, HB3-HB3Z 90S 6 dimensions as motor size 90L
[3] For motors HB3-HB3Z 132SB 2, HB3-HB3Z 132SC 2, HB3-HB3Z 132S 4 dimensions as motor size 132M

* options on request
** both version with key

14.6

iP 77...PE

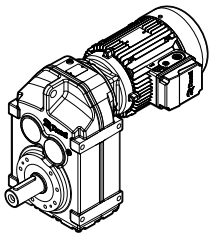

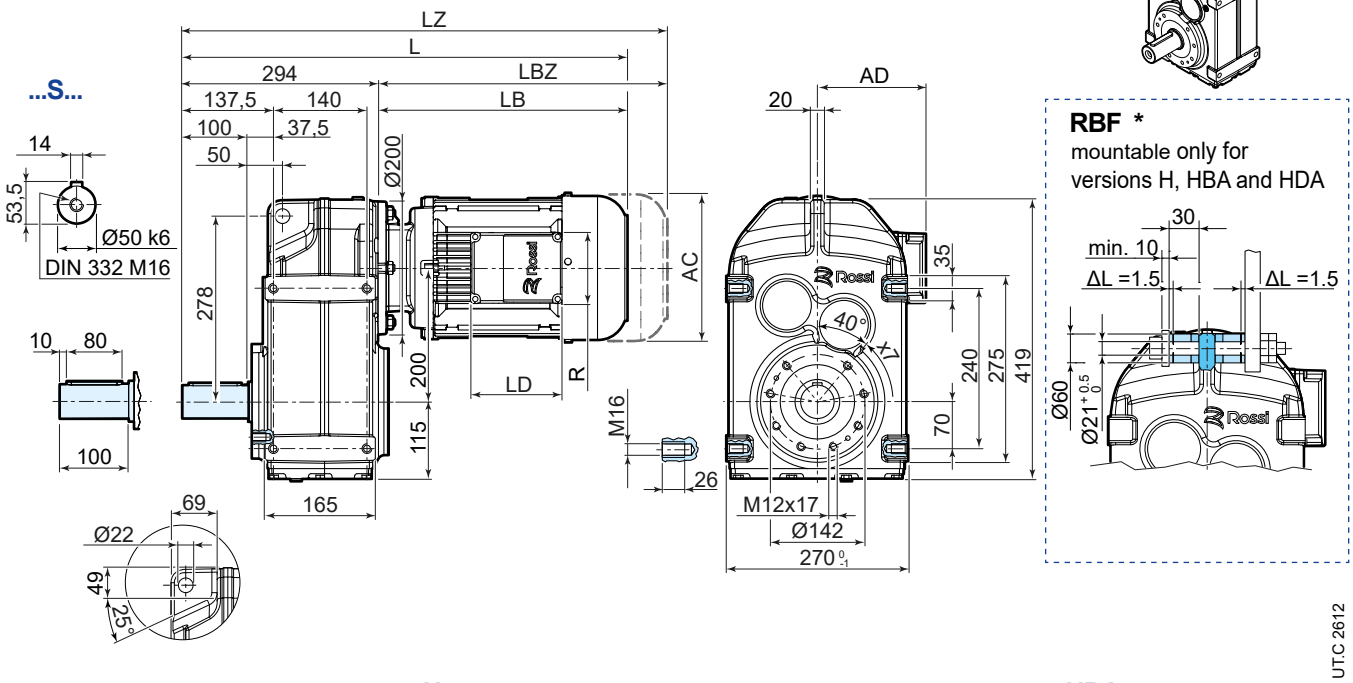

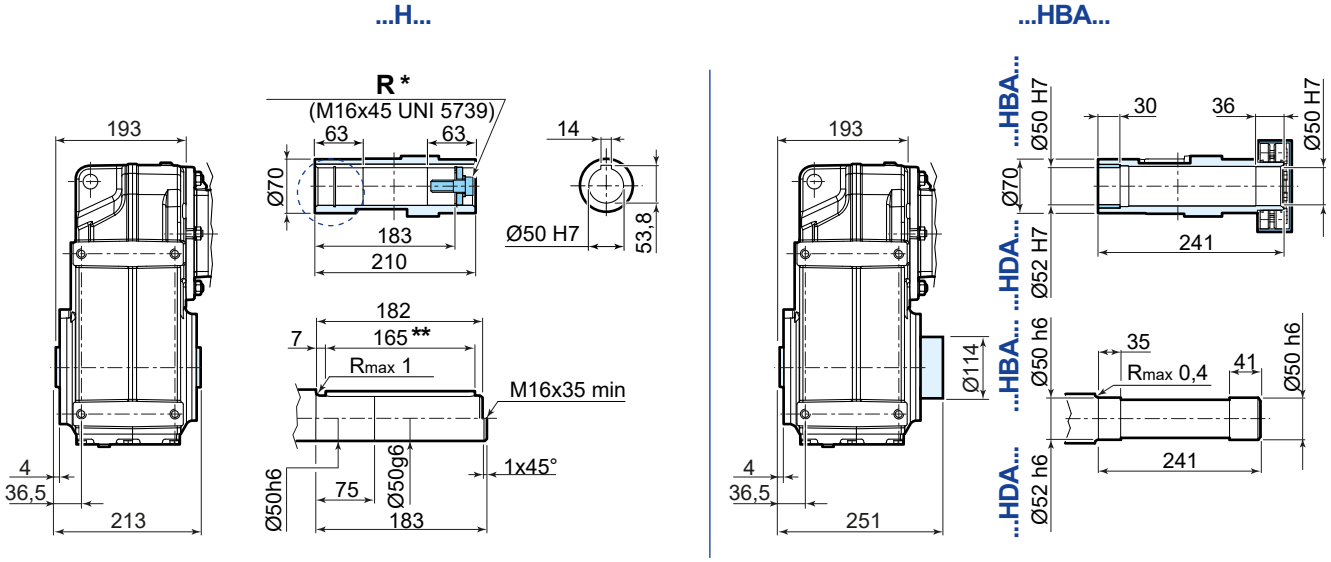

	63	71	80	90S [2]	90L	100	112	132S [3]	132M
AC	123	138	156	176	176	194	218	257	257
AD	95	112	121	141	141	151	163	194	194
LB	199	225	254	276	306	339	377	433	493
LBZ	254	287	323	355	385	434	476	541	601
L [1]	493	519	548	570	600	633	671	727	787
LZ [1]	548	581	617	649	679	728	770	835	895
LD	103	103	103	136	136	136	136	190	190
R	86	86	86	106	106	106	106	148	148

223
83
278

[1] See also pages 90, 91
[2] For motors HB3-HB3Z 90S 2, HB3-HB3Z 90S 4, HB3-HB3Z 90S 6 dimensions as motor size 90L
[3] For motors HB3-HB3Z 132SB 2, HB3-HB3Z 132SC 2, HB3-HB3Z 132S 4 dimensions as motor size 132M

* options on request
** both version with key

iP 77... FE

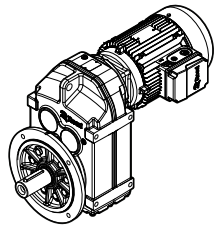

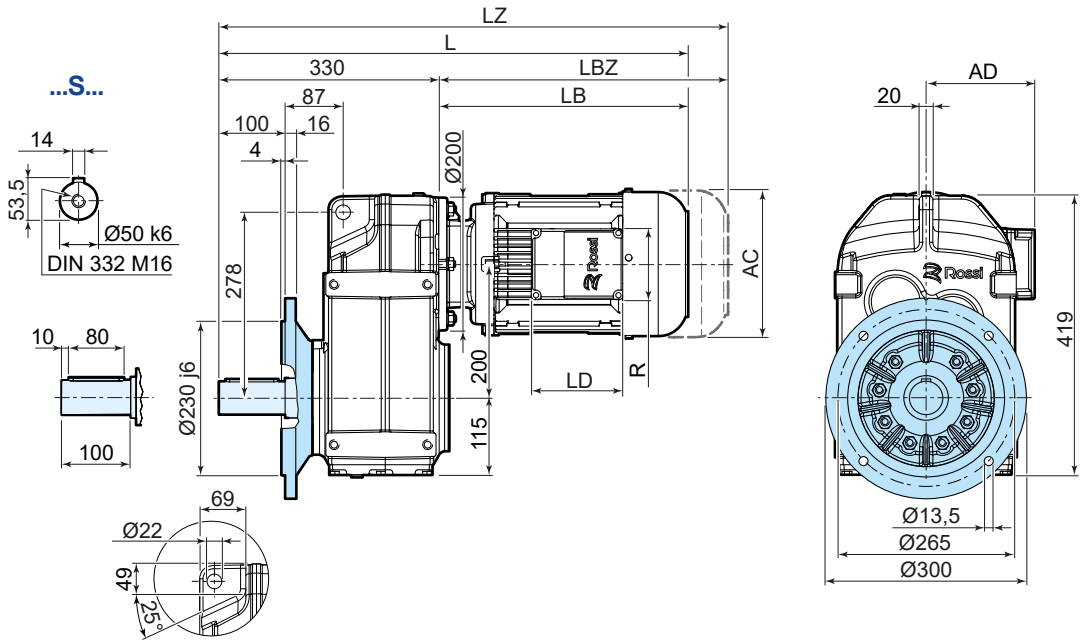

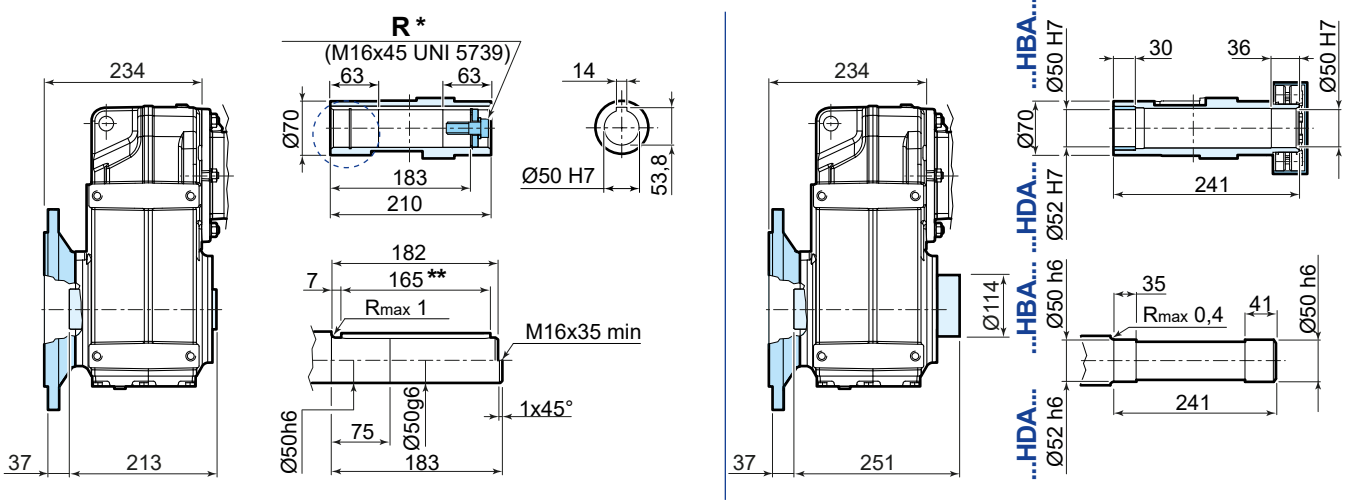

	63	71	80	90S [2]	90L	100	112	132S [3]	132M
AC	123	138	156	176	176	194	218	257	257
AD	95	112	121	141	141	151	163	194	194
LB	199	225	254	276	306	339	377	433	493
LBZ	254	287	323	355	385	434	476	541	601
L [1]	529	555	584	606	636	669	707	763	823
LZ [1]	584	617	653	685	715	764	806	871	931
LD	103	103	103	136	136	136	136	190	190
R	86	86	86	106	106	106	106	148	148

223
83
278
FB14
88

[1] See also pages 90, 91
[2] For motors HB3-HB3Z 90S 2, HB3-HB3Z 90S 4, HB3-HB3Z 90S 6 dimensions as motor size 90L
[3] For motors HB3-HB3Z 132SB 2, HB3-HB3Z 132SC 2, HB3-HB3Z 132S 4 dimensions as motor size 132M

* options on request
** both version with key

14.7

iP 87...PE

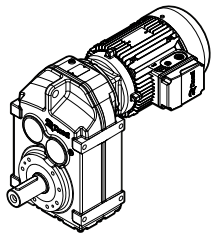

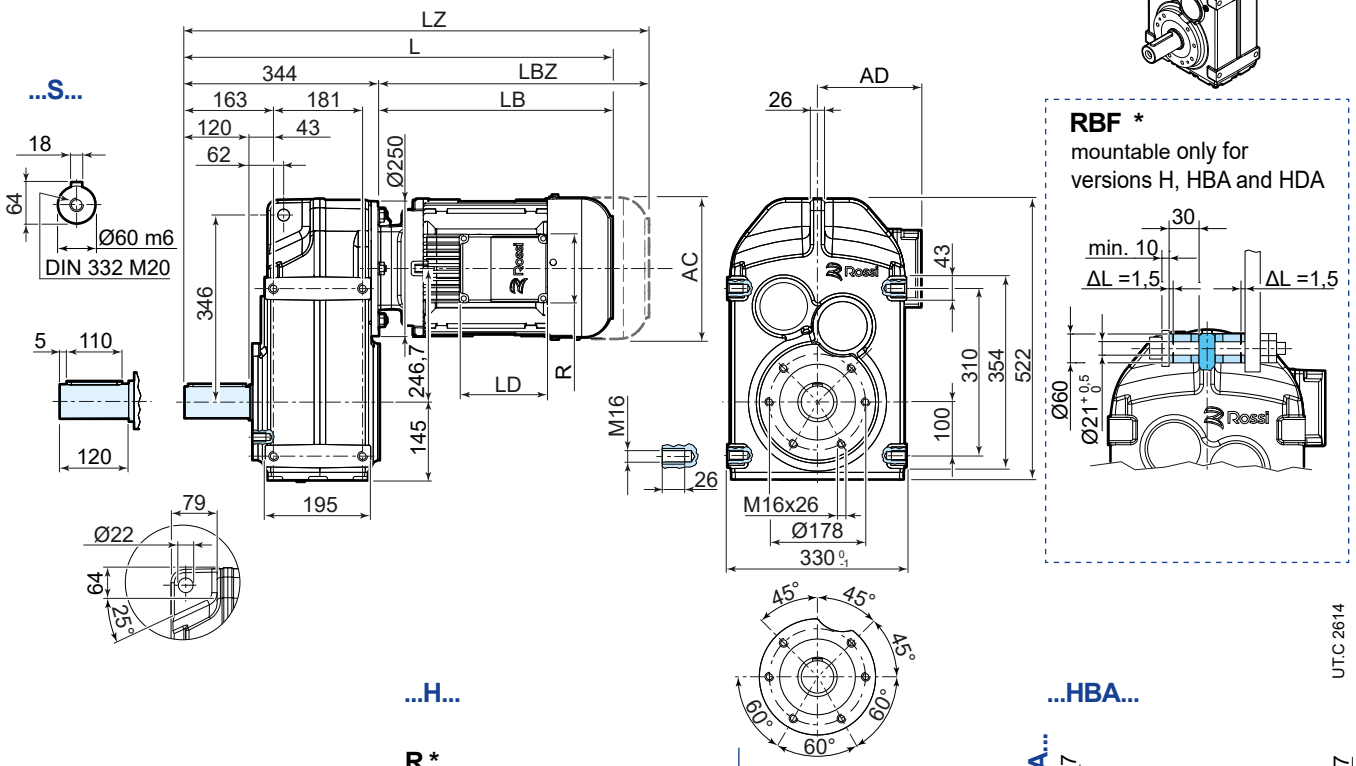

	80	90S [2]	90L	100	112	132S [3]	132M
AC	156	176	176	194	218	257	257
AD	121	141	141	151	163	194	194
LB	254	276	306	339	377	433	493
LBZ	323	355	385	434	476	541	601
L [1]	598	620	650	683	721	777	837
LZ [1]	667	699	729	778	820	885	945
LD	103	136	136	136	136	190	190
R	86	106	106	106	106	148	148

223
83
278

[1] See also pages 90, 91
[2] For motors HB3-HB3Z 90S 2, HB3-HB3Z 90S 4, HB3-HB3Z 90S 6 dimensions as motor size 90L
[3] For motors HB3-HB3Z 132SB 2, HB3-HB3Z 132SC 2, HB3-HB3Z 132S 4 dimensions as motor size 132M

* options on request
** both version with key

iP 87... FE

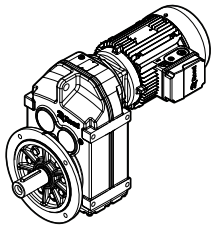

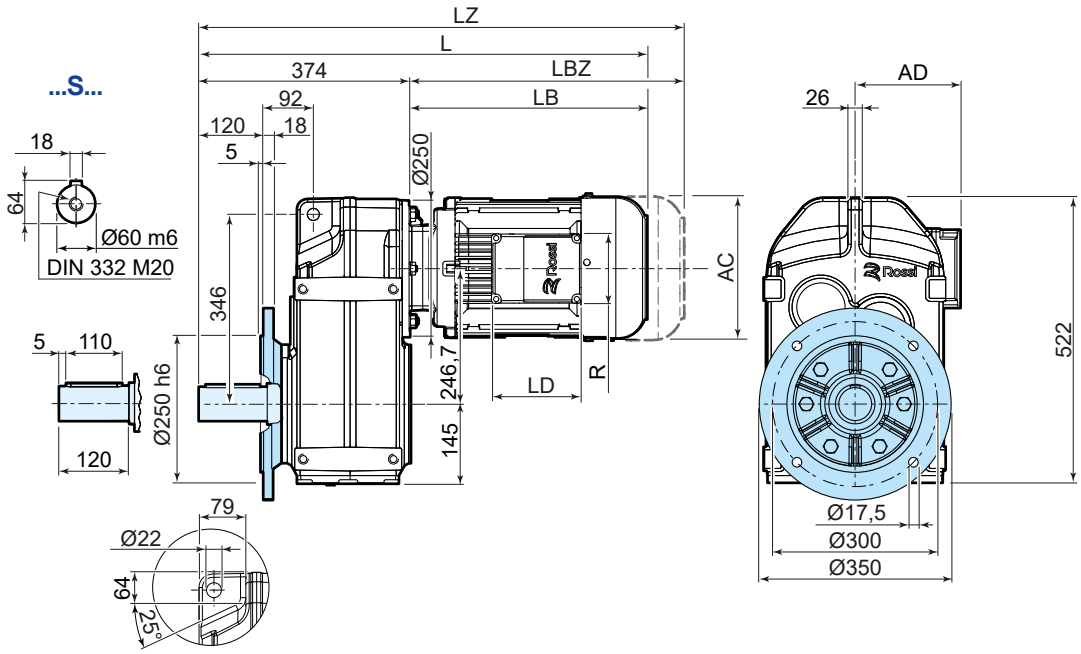

UT.C 2615

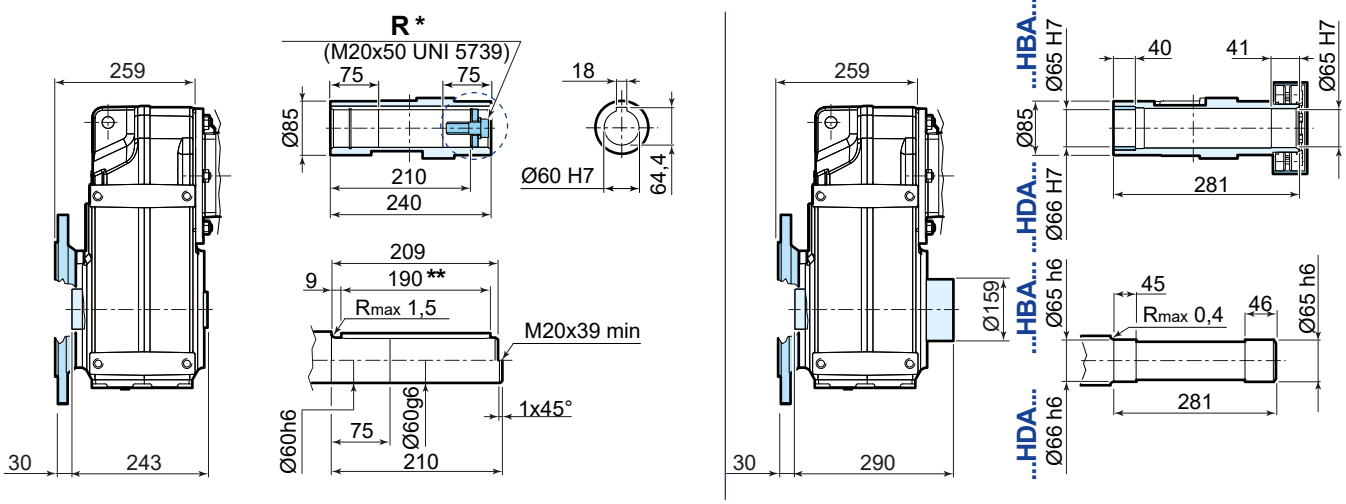

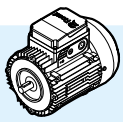

	80	90S [2]	90L	100	112	132S [3]	132M
AC	156	176	176	194	218	257	257
AD	121	141	141	151	163	194	194
LB	254	276	306	339	377	433	493
LBZ	323	355	385	434	476	541	601
L [1]	628	650	680	713	751	807	867
LZ [1]	697	729	759	808	850	915	975
LD	103	136	136	136	136	190	190
R	86	106	106	106	106	148	148

[1] See also pages 90, 91
[2] For motors HB3-HB3Z 90S 2, HB3-HB3Z 90S 4, HB3-HB3Z 90S 6 dimensions as motor size 90L
[3] For motors HB3-HB3Z 132SB 2, HB3-HB3Z 132SC 2, HB3-HB3Z 132S 4 dimensions as motor size 132M

223
83
278
FB14
88

* options on request
** both version with key

iP

14.8

iP 97...PE

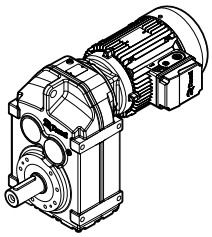

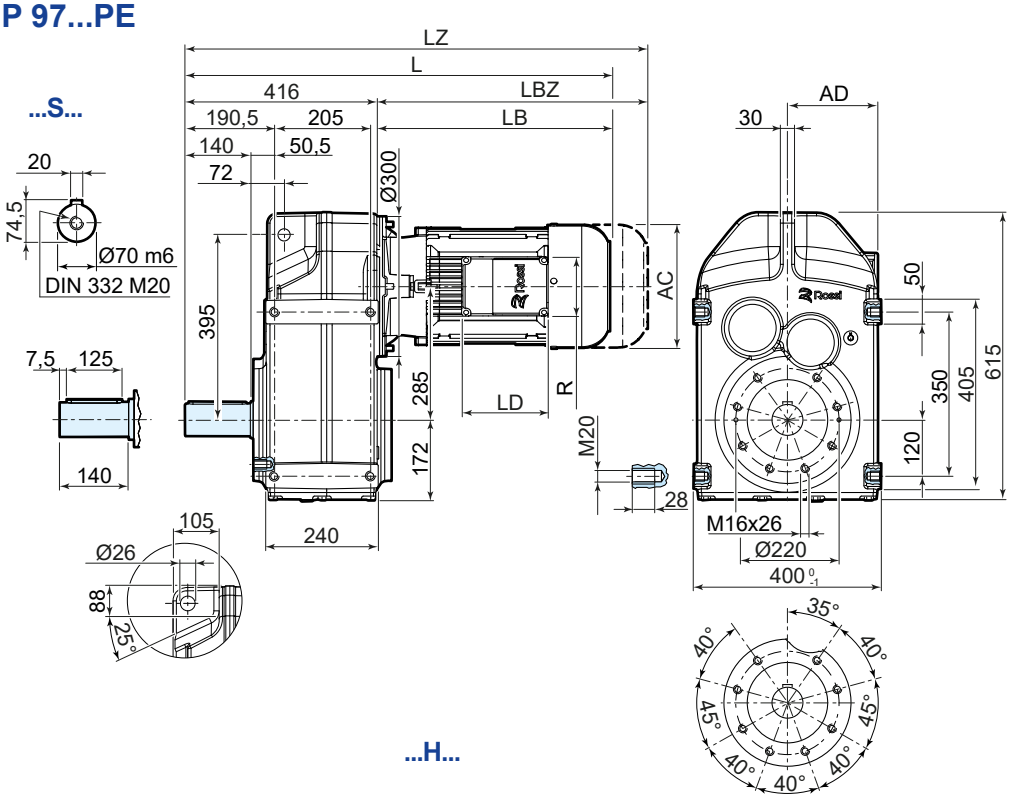

RBF *
mountable only for versions H, HBA and HDA

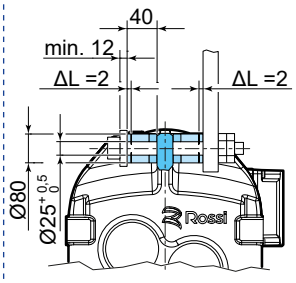

UT.C 2616

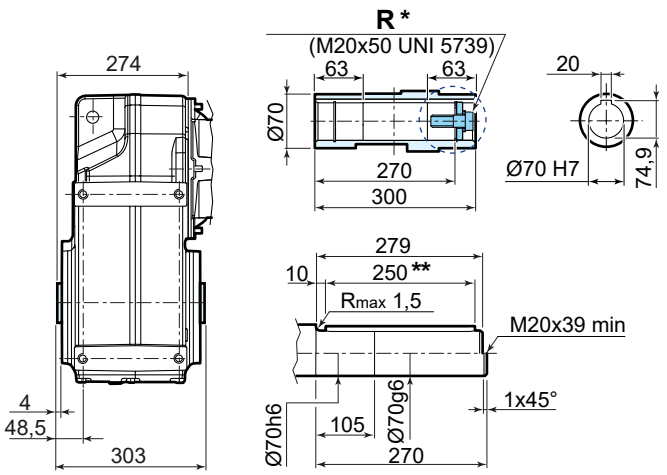

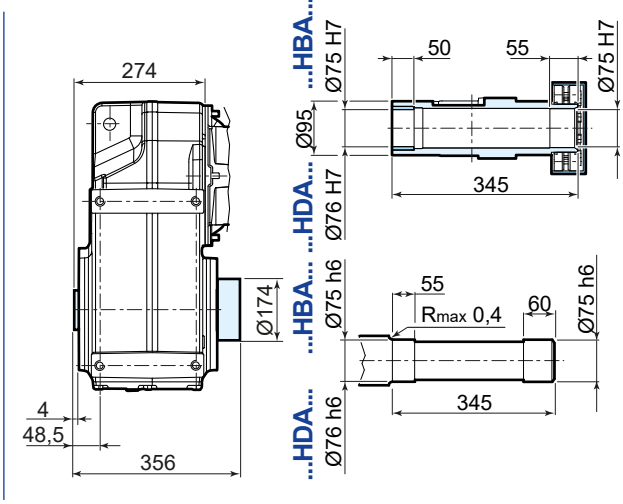

	80	90S [2]	90L	100	112	132S [3]	132M
AC	156	176	176	194	218	257	257
AD	121	141	141	151	163	194	194
LB	254	276	306	339	377	433	493
LBZ	323	355	385	434	476	541	601
L [1]	670	692	722	755	793	849	909
LZ [1]	739	771	801	850	892	957	1017
LD	103	136	136	136	136	190	190
R	86	106	106	106	106	148	148

223
83
278

[1] See also pages 90, 91
[2] For motors HB3-HB3Z 90S 2, HB3-HB3Z 90S 4, HB3-HB3Z 90S 6 dimensions as motor size 90L
[3] For motors HB3-HB3Z 132SB 2, HB3-HB3Z 132SC 2, HB3-HB3Z 132S 4 dimensions as motor size 132M

* options on request
** both version with key

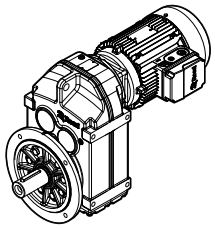

iP 97... FE

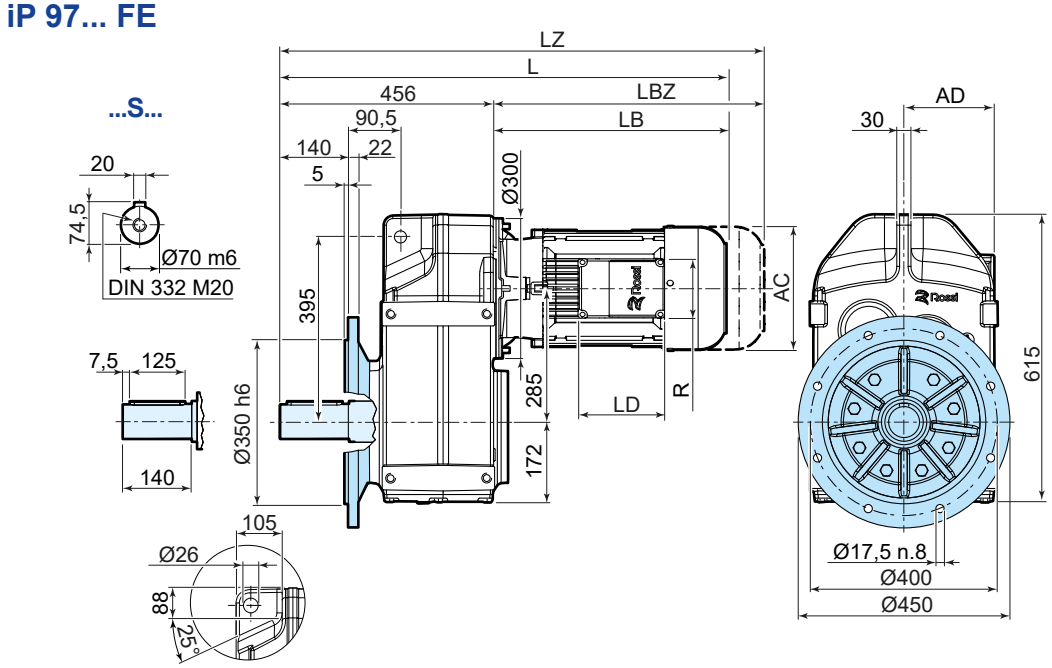

UT.C 2617

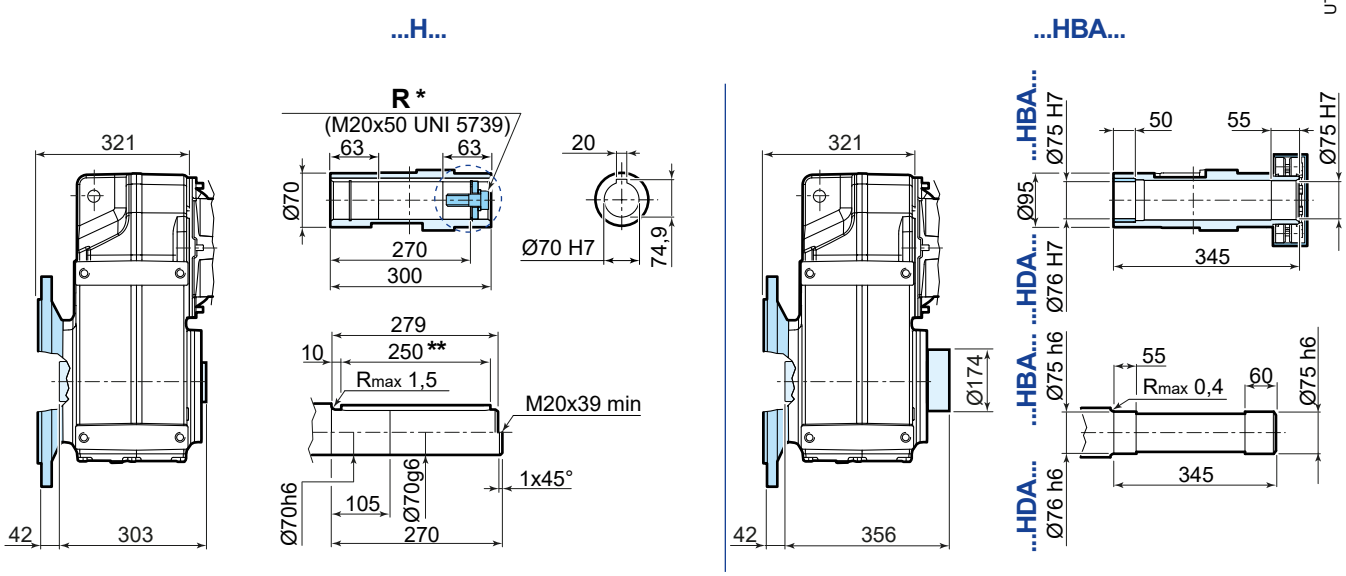

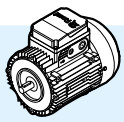

	80	90S [2]	90L	100	112	132S [3]	132M
AC	156	176	176	194	218	257	257
AD	121	141	141	151	163	194	194
LB	254	276	306	339	377	433	493
LBZ	323	355	385	434	476	541	601
L [1]	710	732	762	795	833	889	949
LZ [1]	779	811	841	890	932	997	1057
LD	103	136	136	136	136	190	190
R	86	106	106	106	106	148	148

[1] See also pages 90, 91
[2] For motors HB3-HB3Z 90S 2, HB3-HB3Z 90S 4, HB3-HB3Z 90S 6 dimensions as motor size 90L
[3] For motors HB3-HB3Z 132SB 2, HB3-HB3Z 132SC 2, HB3-HB3Z 132S 4 dimensions as motor size 132M

223
83
278
88

* options on request
** both version with key

15

Compact three-phase motor HB and brake motor HBZ

Section contents

15.1	Compact asynchronous three-phase motor HB	280
15.1.1	General specifications	280
15.2	Technical data of compact asynchronous three-phase motor HB	282
15.3	Compact asynchronous three-phase brake motor HBZ	285
15.3.1	General specifications	285
15.3.2	Brake specifications	287
15.4	Technical data of compact asynchronous three-phase brake motor HBZ	289

15.1

Compact asynchronous three-phase motor HB

15.1.1 General specifications

- **insulation class F**, rise temperature B;
- **mating tolerances under «accuracy» rating;**
- **IP55 protection;**
- **suitable for operation with inverter;**
- asynchronous three-phase **electric motor** with rotor cage, total enclosed, externally ventilated (cooling system IC 411 with cooling fan keyed on motor shaft);
- **single-speed** 2, 4 or 6 poles **motor**;
- particularly strong **construction** (both electrical and mechanical); duly proportioned bearings;
- **«generous» electromagnetic sizing** having margins of safety, good acceleration capacity (high frequency of starting) and uniform starting (slightly «sagged» characteristic curves);
- **metallic terminal box;**
- **designs available** for every application need (independent cooling fan, independent cooling fan and encoder, protections higher than IP 55, etc.)

Standard

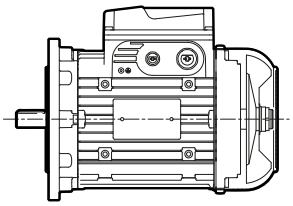

Encoder

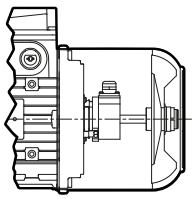

Independent cooling fan

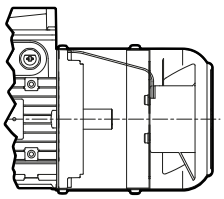

Independent cooling fan and encoder

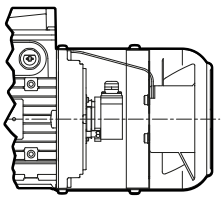

UT.C 1374

Rated power delivered on continuous duty (S1) and referred to nominal voltage and frequency, ambient temperature -15 ÷ 40 °C and maximum altitude 1000 m.
Motor housing in pressure diecast light alloy.
Drive end and non-drive end end-shield in cast iron or light alloy.
«Supported» tightening attachments of **endshields and flanges** fitted on housing with «tight» coupling.
Ball bearings lubricated «for life» assuming pollution-free surroundings; preload spring.
Motor shaft axially fastened on drive end.
Rear threaded extraction hole as standard for sizes ≥ 90 ... 132.
Steel **fan cover**.
Thermoplastic **cooling fan** with radial vanes.
Terminal box made of light alloy (integral with housing with knockout cable openings on both sides, two holes, one for power cable and one for auxiliary equipment).
Left side position non drive end (pos. TB0 see page 43); on request other positions.
Pressure diecast light alloy **terminal box cover**.
Terminal block with 6 terminals (9 terminals for supply voltage YY230 Y460 60 Hz).
Earth terminal located inside terminal box; prearranged for the installation of further two external earth terminals on housing.

Rotor: pressure diecast cage rotor in aluminium.
Stator winding with class H copper conductor insulation, insulated with double coat, type of impregnation with resin of class H; other materials are of classes F and H for a class F insulation system.
Materials and type of impregnation allow use in tropical climates without further treatments.
Rotor dynamic balancing: vibration velocity under standard rating A. Motors are balanced with half key inserted into shaft extension.
Painting with bi-component water-based acrylic enamel, color blue RAL 5010 DIN 1843, suitable to resist to normal industrial environments (corrosivity class C3 ISO 12944-2).

For non-standard designs and accessories see page 44.

15.2

Technical data of compact asynchronous three-phase motor HB

2 poles - 3000 min^{-1}
IP 55
IC 411
Insulation class F
Temperature rise class B

IE3
400 V - 50Hz
ErP

P_N kW	Motor	n_N min^{-1}	M_N N m	I_N A 400 V	cos φ	η IE3 IEC 60034-2-1 100%	75%	50%	M_S / M_N	M_{max} / M_N	I_S / I_N	J_0 kg m^2	z_0 start/h	kg
1,1	**HB3 80 B 2**	2875	3,7	2,3	0,84	82,7	83,2	81	3,9	3,9	7,7	0,0013	2500	11,6
1,5	**HB3 90 S 2**	2890	4,97	2,9	0,88	84,2	84,5	83,3	3,3	3,6	7,9	0,0019	1800	16
2,2	**HB3 90 LA 2**	2890	7,3	4,4	0,85	85,9	86,2	85,1	3,9	4,4	8,4	0,0023	1600	18
3	**HB3 100 LA 2**	2930	9,8	6,2	0,80	87,1	87,2	85,2	4,2	5,1	10,1	0,0044	1500	24
4	**HB3 112 M 2**	2940	13	7,6	0,87	88,1	88,2	86,7	2,8	4,2	9,8	0,0074	1400	33
5,5	**HB3 132 S 2**	2960	17,8	10,4	0,85	89,2	88,6	85,6	5,2	6,1	12,7	0,0174	710	53
7,5	**HB3 132 SB 2**	2960	24,3	14	0,85	90,1	89,9	87,3	5,7	6,5	13,6	0,0215	710	61,5

4 poles - 1500 min^{-1}
IP 55
IC 411
Insulation class F
Temperature rise class B

IE2
400 V - 50Hz
ErP

P_N kW	Motor	n_N min^{-1}	M_N N m	I_N A 400 V	cos φ	η IE2 IEC 60034-2-1 100%	75%	50%	M_S / M_N	M_{max} / M_N	I_S / I_N	J_0 kg m^2	z_0 start/h	kg
0,12	**HB2 63 A 4**	1370	0,84	0,52	0,61	55	52,2	48,5	2,2	2,5	2,7	0,0002	12500	3,9
0,18	**HB2 63 B 4**	1360	1,26	0,7	0,63	58,9	56,1	50	2,1	2,3	2,8	0,0003	12500	4,5
0,25	**HB2 71 A 4**	1400	1,71	0,8	0,68	66,7	66	60,4	2,2	2,5	3,6	0,0007	10000	5,7
0,37	**HB2 71 B 4**	1400	2,52	1,1	0,68	71,4	70,9	67,8	2,5	2,8	4	0,0009	10000	6,6
0,55	**HB2 80 A 4**	1405	3,74	1,38	0,78	73,8	74	70,1	2,5	3,58	4,9	0,0019	8000	7,6

4 poles - 1500 min^{-1}
IP 55
IC 411
Insulation class F
Temperature rise class B

IE3
400 V - 50Hz
ErP

P_N kW	Motor	n_N min^{-1}	M_N N m	I_N A 400 V	cos φ	η IE3 IEC 60034-2-1 100%	75%	50%	M_S / M_N	M_{max} / M_N	I_S / I_N	J_0 kg m^2	z_0 start/h	kg
0,75	**HB3 80 B 4**	1410	5,1	2	0,67	82,5	82,2	80,1	3,2	3,3	5,3	0,0018	6800	12
1,1	**HB3 90 S 4**	1420	7,4	2,4	0,80	84,1	84,8	83,6	3,0	3,5	6,4	0,0041	3150	18,5
1,5	**HB3 90 L 4**	1430	10,1	3,3	0,78	85,3	86,1	85	3,1	3,7	6,7	0,0043	3000	19
2,2	**HB3 100 LA 4**	1440	14,6	4,8	0,76	86,7	87,2	85,5	3,5	4,4	7,4	0,0076	3000	26
3 (1)	**HB3 112 MA 4**	1450	19,8	6,1	0,80	88,7	88,6	87,3	3,5	4,4	8,8	0,013	2000	33
4	**HB3 112 M 4**	1450	26,3	8,5	0,77	88,6	89,2	88	3,7	4,6	9,0	0,014	1800	35
5,5	**HB3 132 S 4**	1470	35,8	12	0,74	89,6	89,5	87,6	4,5	5,0	9,1	0,0357	900	58
7,5	**HB3 132 M 4**	1460	49	15,2	0,79	90,4	90,4	89,6	3,9	4,2	8,4	0,0432	900	66
9,2 (1)	**HB3 132 MB 4**	1460	60,2	19,2	0,76	91	90,8	90,1	4,0	4,1	8,5	0,0448	800	68,5

(1) Power not according to standard for the relevant motor size

6 poles - 1000 min^{-1}
IP 55
IC 411
Insulation class F
Temperature rise class B

IE2
400 V - 50Hz
ErP

P_N kW	Motor			n_N min^{-1}	M_N N m	I_N A 400 V	cos φ	η IE2 IEC 60034-2-1 100%	75%	50%	M_S / M_N	M_{max} / M_N	I_S / I_N	J_0 kg m^2	z_0 start/h	kg
0,12	**HB2**	**63 B**	**6**	910	1,26	0,57	0,57	53,7	49,5	41,1	2,7	2,8	2,5	0,0005	12500	4,5
0,18	**HB2**	**71 A**	**6**	910	1,89	0,62	0,68	61,6	59,8	51,9	2,4	2,5	3,2	0,0009	12500	6
0,25	**HB2**	**71 B**	**6**	900	2,65	0,85	0,68	62,4	60,7	54	2,5	2,6	3,2	0,0012	11200	6,8
0,37	**HB2**	**80 A**	**6**	930	3,8	1,2	0,67	66,8	65,4	58,4	2,5	2,6	3,6	0,0019	9500	8
0,55	**HB2**	**80 B**	**6**	920	5,7	1,68	0,68	69,8	69,7	64,9	2,5	2,6	3,7	0,0025	9000	9,6

6 poles - 1000 min^{-1}
IP 55
IC 411
Insulation class F
Temperature rise class B

IE3
400 V - 50Hz
ErP

P_N kW	Motor			n_N min^{-1}	M_N N m	I_N A 400 V	cos φ	η IE3 IEC 60034-2-1 100%	75%	50%	M_S / M_N	M_{max} / M_N	I_S / I_N	J_0 kg m^2	z_0 start/h	kg
0,75	**HB3**	**90 S**	**6**	930	7,7	2	0,72	78,9	76	73	2,1	2,9	4,9	0,0056	6000	15,5
1,1	**HB3**	**90 L**	**6**	930	11,3	2,8	0,72	81	79	77	2,6	3	5,1	0,0071	5600	19,5
1,5	**HB3**	**100 LA**	**6**	950	15,1	3,5	0,75	82,5	82,4	80,4	2,5	3,4	6,5	0,013	3000	26
2,2	**HB3**	**112 M**	**6**	960	21,9	5,1	0,73	84,3	85	83,2	2,3	3,5	6,9	0,0202	2800	33
3	**HB3**	**132 S**	**6**	970	29,5	6,9	0,72	85,6	88	86,3	2,4	3,8	7,6	0,0435	1400	54

15.3.1 General specifications

- **Insulation class F**, rise temperature B;
- **mating tolerances under «accuracy» rating;**
- **IP55 protection;**
- **suitable for operation with inverter;**
- **electric asynchronous three-phase brake motor with d.c. brake** (braking in case of supply failure) with **double braking surface with braking torque proportioned to motor torque** (usually $M_f \approx 2\ M_N$);
- **single-speed** 2, 4 or 6, poles **motor**;
- **particularly strong construction** (both electrical and mechanical) to withstand alternating torsional and thermic stresses of starting and braking; duly proportioned bearings;
- **electromagnetic sizing especially studied** to allow high acceleration capacity (high frequency of starting) and uniform starting;
- **large metal terminal box**, multivoltage rectifier, one brake coil, for **voltage always coordinated** with the motor one (both Δ and Y);
- **maximum reduced noise level and operation progressivity** (both at starting and braking) thanks to a lower rapidity (typical of d.c. brake) of the anchor (which is lighter and less quick in the impact): motor starts slightly braked i.e. with greater progressivity; good release and braking rapidity; possibility to increase rapidity in braking, with supply opening on d.c. side;
- **high braking capacity;**
- **designs available** for every application need (independent cooling fan, independent cooling fan and encoder, protections higher than IP 55, etc.);
- **particularly suitable** for applications requiring **regular and low-noise starting and braking** and, at the same time, braking with good rapidity and precision and high number of starts.

Standard

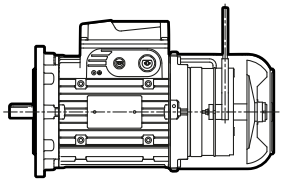

Encoder

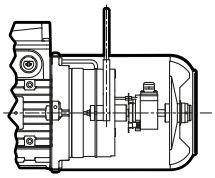

Independent cooling units

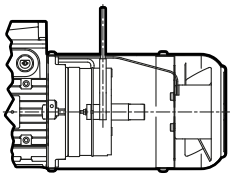

Independent cooling fan and encoder

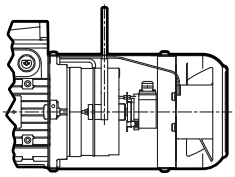

UT.C 1383

«Torque-speed» **characteristic curves** duly optimized for handling (horizontal and vertical traverse movements, rotation), slightly «sagged», without peaks in the hipersynchronous area and with carefully proportioned mean value.
Rated power delivered on continuous duty (S1) and referred to nominal voltage and frequency, ambient temperature -15 ÷ +40 °C and maximum altitude 1 000 m.
Housing in pressure diecast light alloy.
Drive end flange and non-drive end endshield in cast iron or light alloy.
«Supported» tightening attachments of **endshields and flanges** fitted on housing with «tight» coupling.
Ball bearings lubricated «for life» assuming pollution-free surroundings; preload spring.
Motor shaft in steel axially fastened on drive end endshield.
Rear threaded extraction **hole.**
Steel **fan cover**.
Thermoplastic **cooling fan** with radial vanes.

Terminal box made of light alloy (integral with housing with knockout cable openings on both sides, two holes, one for power cable and one for auxiliary equipment). Left side position non drive end (pos. TB0 see page 43); on request other positions. Pressure diecast light alloy **terminal box cover**.
Terminal block with 6 terminals (9 terminals for supply voltage YY230 Y460 60 Hz).
Earth terminal located inside terminal box; prearranged for the installation of further two external earth terminals on housing.
Brake supply: with rectifier laying in terminal box having 2 terminals for cable connection for rectifier supply, 2 for rapid braking external contact; possible brake supply **directly from motor terminal block** or **separately** (to use for: motors supplied by inverter, separate drive needs of motor and brake, etc.). Brake can be supplied, also at motor standstill, with no time limitations.
Rotor: pressure diecast cage rotor in aluminium.
Stator winding with class H copper conductor insulation, insulated with double coat, type of impregnation with resin of class H; other materials are of classes F and H for a class F insulation system.
Rotor **dynamic balancing**: vibration velocity under standard rating A. Motors are balanced with half key inserted into shaft extension.
Painting with two-component water based acrylic enamel, color blue RAL 5010 DIN 1843, suitable for normal industrial environments (corrosivity class C3 ISO 12944-2)

For **non-standard designs** and accessories see page 44.

15.3.2 Brake specifications

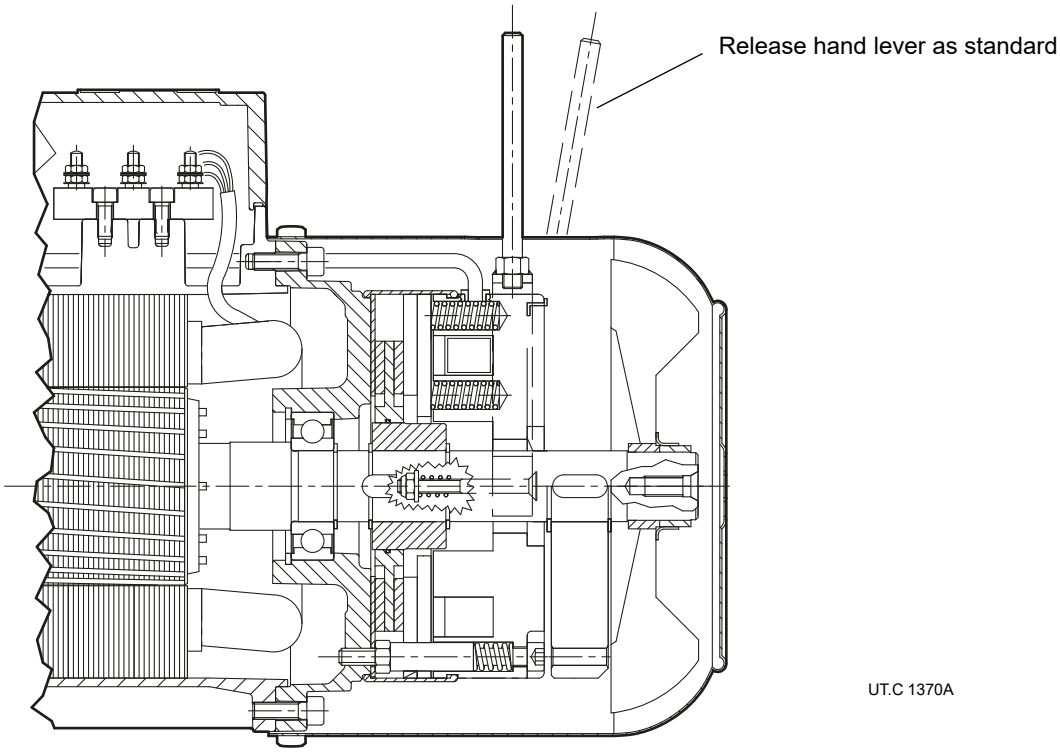

Electromagnetic spring loaded brake (braking occurs automatically when it is not supplied), with **d.c.** toroidal coil and double braking surface, braking torque proportioned to motor torque (usually $M_f \approx 2\ M_N$).
Maximum reduced noise level and operation progressivity (both at starting and braking thanks to a lower rapidity, typical of d.c. brake, of the anchor, which is lighter and less quick in the impact: motor starts slightly braked i.e. with greater progressivity); **good release and braking rapidity**; possibility to increase rapidity, both in releasing (with rapid rectifier) and braking, with supply opening on d.c. side; high braking capacity.
Designs available for every application (encoder, independent cooling fan, independent cooling fan and encoder, second shaft end, etc.).

Particularly suitable for applications requiring regular and low-noise starting and braking and, at the same time, braking with good rapidity and precision and high number of starts.
When electromagnet is not supplied, the brake anchor pushed by springs, presses the brake disk on rear end-shield generating the braking torque on the same brake disk and consequentely on motor shaft it is keyed onto; by supplying the brake the electromagnet draws the brake anchor and releases brake disk and driving shaft.

Key features:

- **multivoltage rectifier** (as standard), specifically designed for the management of a **brake coil only** with supply voltage always coordinated with standard voltage of HBZ motor (Δ 230 Y400 V ± 5% 50 Hz and accordingly also Δ 277 Y480 V ± 5% 60 Hz); **other voltages** on request;
- **rectifier supply directly from motor terminal block** or indifferently from a separate line;
- **braking torque** adjustable by changing number of springs;
- **insulation class F**, temperature rise class B;
- **brake disk**, sliding on moving hub: with single steel coat and double friction surface with average friction coefficient for low wear;
- **brake anchor in two pieces** for greater rapidity of starting and reduced noise;
- **water-proof and dust-proof gaiter and V-ring** both to prevent polluting infiltrations from surroundings towards brake, and to avoid that wear dust of friction surface will be dispersed in the surroundings;
- **lever for manual release with automatic return (as standard)** and removable level rod; position of release lever corresponding to terminal box; on request, other possible positions. Contact Rossi S.p.A.;
- **for other running specifications** see following table.

For **non-standard designs** and accessories see page 44.

Motor is always **equipped with a high reliable rectifier** fixed on terminal box providing adequate connecting terminal (2 for rectifier supply directly from motor terminal block or separate; 2 for external contact of rapid braking).

Multivoltage rectifiers **RM1**[1] (supplied as standard for brakes 12 ... 14) and **RM2**[1] (supplied as standard for brakes 05 ... 07) are a.c./d.c. supply voltage devices with full-wave controlled bridge able to **supply output voltage value independently from input voltage.**

The DC brake is suitable for power supply

range 110 ÷ 440 V a.c. (for brake sizes 12 ÷ 15)
range 200 ÷ 440 V a.c. (for brake sizes 06S ... 07)

without having to change the coil and therefore is also always coordinated with both motor voltages.
In the supply range 200 ÷ 440 V a.c., the rectifier also has an integrated speed-up function (a higher voltage than the nominal voltage is supplied to the brake coil for approx. 400 ms at the start, allowing the brake to be released more quickly).
In addition, compared to a conventional rectifier, multi-voltage also offers the following advantages:

- greater constancy of the brake performance (the output voltage being at a constant predefined value independent of fluctuations in the supply voltage);
- lower brake holding voltage (75 V d.c.) in the released state (lower power consumption, less coil heating and shorter braking delay).

Both models of rectifiers (RM1, RM2) can be switched on and off either on the a.c. side (for maximum quiet operation), or on the a.c. and d.c. sides. (for faster braking), as they are equipped with varistors to protect the diodes, the electromagnet and the d.c. side opening contact.

Main functional brake specifications

Actual values may deviate slightly depending on the ambient temperature and humidity, the brake temperature and the wear condition of the friction linings.

Brake size	(2)	Motor size	M_f 2 springs N m	M_f 4 springs N m	M_f 6 springs N m	Absorption V a.c.	Absorption A a.c. max	Absorption W	Delay of release t_1 (4) ms	Delay of braking t_2 ms	Delay of braking t_2 (d.c.) (5) ms	Air-gap mm min	Air-gap mm max	W_1 (6) MJ/mm	C_{max} (7) mm	W_{max} (8) brakings/h 10	W_{max} (8) brakings/h 100	W_{max} (8) brakings/h 1000
BZ 12	RM1	63 71	1,75	3,5	-	110 ÷ 440	0,09	9	20	100	10	0,25	0,40	70	5	4500	1120	160
BZ 53,13	RM1	71 80	2,5	5	7,5	110 ÷ 440	0,14	12	32	120	10	0,25	0,40	90	5	5600	1400	200
BZ 04, 14	RM1	80 90	5	11	16	110 ÷ 440	0,20	16	45	150	10	0,30	0,45	125	5	7500	1900	265
BZ 05, 15	RM2	90 100 112	13	27	40	110 ÷ 440	0,26	24	63	220	15	0,30	0,45	160	5	10000	2500	355
BZ 06 S	RM2	112	25	50	75	200 ÷ 440	0,28	30	90	300	30	0,35	0,55	220	5	14000	3550	500
BZ 56	RM2	132 S	37	75	-	200 ÷ 440	0,28	50	90	224	20	0,35	0,55	224	4,5	14000	3550	500
BZ 06	RM2	132 S, M	50	100	-	200 ÷ 440	0,28	50	90	224	20	0,35	0,55	224	4,5	14000	3550	500
BZ 07	RM2	132 MB	50	100	150	200 ÷ 440	0,34	65	125	280	25	0,40	0,60	315	4,5	20000	5000	710

(1) The multivoltage rectifiers RM1 and RM2 are patented devices.
(2) Standard rectifier, supplied as standard; the rest time must be between 2.5 s ÷ 3.5 s. If necessary, please contact Rossi S.p.A.
(3) Values valid with M_{fmax}, mean air-gap, nominal value of supply voltage.
(4) Brake release time obtained with standard rectifier and, for RM1, with supply voltage 200 V c.a.
(5) Braking delay obtained with separate brake supply and disconnection on a.c. side of rectifier (t_2) or on a.c. and d.c. side. (t_2 *d.c*).
With direct supply from motor terminal block, the values of t_2 increase by approx. 2,5 times the ones stated in the table.
(6) Work of friction generating a brake disk wear of 1 mm. (minimum value for heavy application, real value is usually greater).
(7) Maximum brake disk wear.
(8) Maximum friction work for each braking.

Technical data of compact asynchronous three-phase brake motor HBZ

2 poles - 3000 min^{-1}
IP55
IC411
Insulation class F
Temperature rise class B

IE2
400 V - 50Hz
ErP

P_N kW	Motor	n_N min^{-1}	M_N N m	I_N A 400 V	cos φ	η IEC 60034-2-1 100%	75%	50%	M_S / M_N	M_{max} / M_N	I_S / I_N	J_0 kg m^2	Brake 1)	M_f N m	z_0 start/h	kg
0,18	**HB2Z 63 A 2**	2800	0,61	0,56	0,71	68,7	66,6	60,7	3,1	3,3	4,1	0,0002	BZ 12	1,75	4750	5,5
0,25	**HB2Z 63 B 2**	2780	0,86	0,75	0,71	70,5	68,9	63,1	3,1	3,2	4,1	0,0003	BZ 12	1,75	4750	6,1
0,37	**HB2Z 71 A 2**	2800	1,26	0,95	0,77	75	74,7	70,8	3,1	3,3	5,2	0, 0004	BZ 12	3,5	4000	7,7
0,55	**HB2Z 71 B 2**	2820	1,86	1,33	0,78	77,3	76,9	72,9	3,6	3,7	5,8	0,0005	BZ 53	5	4000	9,4

2 poles - 3000 min^{-1}
IP55
IC411
Insulation class F
Temperature rise class B

IE3
400 V - 50Hz
ErP

P_N kW	Motor	n_N min^{-1}	M_N N m	I_N A 400V	cos φ	η IE3 IEC 60034-2-1 100%	75%	50%	M_S / M_N	M_{max} / M_N	I_S / I_N	J_0 kg m^2	Brake	M_f N m	z_0 start/h	kg
0,75	**HB3Z 80 A 2**	2870	2,5	1,7	0,78	80,7	79,9	76,7	3,6	3,8	7,3	0,001	BZ13	5	2500	10,7
1,1	**HB3Z 80 B 2**	2875	3,7	2,3	0,84	82,7	83,2	81	3,9	3,9	7,7	0,0015	BZ04	11	2500	15,5
1,5	**HB3Z 90 S 2**	2890	4,97	2,9	0,88	84,2	84,5	83,3	3,3	3,6	7,9	0,0021	BZ14	11	1800	20
2,2	**HB3Z 90 LA 2**	2890	7,3	4,4	0,85	85,9	86,2	85,1	3,9	4,4	8,4	0,0027	BZ05	27	1600	24
3	**HB3Z 100 LA 2**	2930	9,8	6,2	0,80	87,1	87,2	85,2	4,2	5,1	10,1	0,0048	BZ15	27	1500	30
4	**HB3Z 112 M 2**	2940	13	7,6	0,87	88,1	88,2	86,7	2,8	4,2	9,8	0,0078	BZ15	27	1400	39
5,5	**HB3Z 132 S 2**	2960	17,8	10,4	0,85	89,2	88,6	85,6	5,2	6,1	12,7	0,0184	BZ06	50	710	64
7,5	**HB3Z 132 SB 2**	2960	24,3	14	0,85	90,1	89,9	87,3	5,7	6,5	13,6	0,0225	BZ06	50	710	72,5

4 poles - 1500 min^{-1}
IP55
IC411
Insulation class F
Temperature rise class B

IE2
400 V - 50Hz
ErP

P_N kW	Motor	n_N min^{-1}	M_N N m	I_N A 400V	cos φ	η IE2 IEC 60034-2-1 100%	75%	50%	M_S / M_N	M_{max} / M_N	I_S / I_N	J_0 kg m^2	Brake	M_f N m	z_0 start/h	kg
0,12	**HB2Z 63 A 4**	1370	0,84	0,52	0,61	55	52,2	48,5	2,2	2,5	2,7	0,0003	BZ12	1,75	12500	5,7
0,18	**HB2Z 63 B 4**	1360	1,26	0,7	0,63	58,9	56,1	50	2,1	2,3	2,8	0,0004	BZ12	3,5	12500	6,3
0,25	**HB2Z 71 A 4**	1400	1,71	0,8	0,68	66,7	66	60,4	2,2	2,5	3,6	0,0008	BZ53	5	10000	8,4
0,37	**HB2Z 71 B 4**	1400	2,52	1,1	0,68	71,4	70,9	67,8	2,5	2,8	4	0,0010	BZ53	5	10000	9,3
0,55	**HB2Z 80 A 4**	1405	3,74	1,38	0,78	73,8	74	70,1	2,5	3,58	4,9	0,0019	BZ04	11	8000	11,5

4 poles - 1500 min^{-1}
IP55
IC411
Insulation class F
Temperature rise class B

IE3
400 V - 50Hz
ErP

P_N kW	Motor	n_N min^{-1}	M_N N m	I_N A 400V	cos φ	η IE3 IEC 60034-2-1 100%	75%	50%	M_S / M_N	M_{max} / M_N	I_S / I_N	J_0 kg m^2	Brake	M_f N m	z_0 start/h	kg
0,75	**HB3Z 80 B 4**	1410	5,1	2	0,67	82,5	82,2	80,1	3,2	3,3	5,3	0,0020	BZ04	11	6800	16
1,1 (1)	**HB3Z 90 S 4**	1420	7,4	2,4	0,80	84,1	84,8	83,6	3,0	3,5	6,4	0,0043	BZ14	16	3150	22,5
1,5 (1)	**HB3Z 90 L 4**	1430	10,1	3,3	0,78	85,3	86,1	85	3,1	3,7	6,7	0,0047	BZ05	27	3000	25
2,2 (1)	**HB3Z 100 LA 4**	1440	14,6	4,8	0,76	86,7	87,2	85,5	3,5	4,4	7,4	0,0080	BZ15	40	3000	32
3 (1)	**HB3Z 112 MA 4**	1450	19,8	6,1	0,80	88,7	88,6	87,3	3,5	4,4	8,8	0,0130	BZ15	40	2000	39
4	**HB3Z 112 M 4**	1450	26,3	8,5	0,77	88,6	89,2	88	3,7	4,6	9,0	0,0150	BZ06 S	75	1800	44
5,5	**HB3Z 132 S 4**	1470	35,8	12	0,74	89,6	89,5	87,6	4,5	5,0	9,1	0,0367	BZ56	75	900	69
7,5	**HB3Z 132 M 4**	1460	49	15,2	0,79	90,4	90,4	89,6	3,9	4,2	8,4	0,0442	BZ06	100	900	77
9,2 (1)	**HB3Z 132 MB 4**	1460	60,2	19,2	0,76	91	90,8	90,1	4,0	4,1	8,5	0,0470	BZ07	150	800	80,5

(1) Power not according to standard for the relevant motor size

6 poles - 1000 min^{-1}
IP55
IC411
Insulation class F
Temperature rise class B

IE2
400 V - 50Hz
ErP

P_N kW	Motor	n_N min^{-1}	M_N N m	I_N A 400V	cos φ	η IE2 IEC 60034-2-1 100%	75%	50%	M_S / M_N	M_{max} / M_N	I_S / I_N	J_0 kg m^2	Brake	M_f N m	z_0 start/h	kg
0,12	**HB2Z 63 B 6**	910	1,26	0,57	0,57	53,7	49,5	41,1	2,7	2,8	2,5	0,0005	BZ12	3,5	12500	6,3
0,18	**HB2Z 71 A 6**	910	1,89	0,62	0,68	61,6	59,8	51,9	2,4	2,5	3,2	0,0010	BZ53	5	11200	8,7
0,25	**HB2Z 71 B 6**	900	2,65	0,85	0,68	62,4	60,7	54	2,5	2,6	3,2	0,0013	BZ53	5	11200	9,5
0,37	**HB2Z 80 A 6**	930	3,8	1,2	0,67	66,8	65,4	58,4	2,5	2,6	3,6	0,0021	BZ04	11	9500	12
0,55	**HB2Z 80 B 6**	920	5,7	1,68	0,68	69,8	69,7	64,9	2,5	2,6	3,7	0,0027	BZ04	16	9000	13,5

6 poles - 1000 min^{-1}
IP55
IC411
Insulation class F
Temperature rise class B

IE3
400 V - 50Hz
ErP

P_N kW	Motor	n_N min^{-1}	M_N N m	I_N A 400V	cos φ	η IE3 IEC 60034-2-1 100%	75%	50%	M_S / M_N	M_{max} / M_N	I_S / I_N	J_0 kg m^2	Brake	M_f N m	z_0 start/h	kg
0,75	**HB3Z 90 S 6**	930	7,7	2	0,72	78,9	76	73	2,1	2,9	4,9	0,0057	BZ14	16	7100	19,5
1,1	**HB3Z 90 L 6**	930	11,3	2,8	0,72	81	79	77	2,6	3	5,1	0,0071	BZ05	27	5300	26
1,5	**HB3Z 100 LA 6**	950	15,1	3,5	0,75	82,5	82,4	80,4	2,5	3,4	6,5	0,0133	BZ15	40	3000	32
2,2	**HB3Z 112 M 6**	960	21,9	5,1	0,73	84,3	85	83,2	2,3	3,5	6,9	0,0211	BZ06S	50	2800	42
3	**HB3Z 132 S 6**	970	29,5	6,9	0,72	85,6	88	86,3	2,4	3,8	7,6	0,0445	BZ56	75	1400	65

16

Installation and maintenance

Section contents

16.1 Safety 294

16.2 Installation and maintenance 295

16.1

Safety

Important:
The gearmotors supplied by Rossi S.p.A. must be incorporated into machinery and **should not be commissioned before the machinery or system in which the components have been incorporated conforms to:**

- **Machinery directive 2006/42/EC and subsequent updatings; in particular, possible safety guards for shaft ends not being used and for eventually accessible fan cover passages (or other) are the Buyer's responsibility;**
- **«Electromagnetic compatibility (EMC)» 2004/108/EC and subsequent updatings.**

Attention!
It is recommended to pay attention to all instructions of present handbook, all existing safety laws and standards concerning correct installation. Whenever personal injury or property damage may occur, due to falling or projecting parts of gear reducer or of its parts, foresee adequate supplementary protection devices against loosening or breaking of the fastening screws.
If deviations from normal operation occur (temperature increase, vibrations, unusual noise, etc.) immediately switch off the machine.

Safety during installation
An incorrect installation, an improper use, the removing or disconnection of protection devices, the lack of inspections and maintenance, improper connections may cause severe personal injury or property damage.
Therefore the component must be moved, installed, commissioned, handled, controlled, serviced and re-paired **exclusively by responsible qualified personnel specifically instructed** and have the necessary experience to recognize any risks connected with present products avoiding any possible emergencies.

Gear reducers and gearmotors of present catalog are normally suitable for installations in industrial areas: additional protection measures, if necessary, must be adopted and assured by the personnel responsible for the installation.

Attention!
Motors in non-standard design or with constructive **variations** may differ in the details from the ones described here following and may require additional information.

Attention!
For the installation, use and maintenance of the electric motor of the possible motor-variator and/or the electric supply device (frequency converter, soft-start, etc.), and/or any optional electric devices (e.g.: independent cooling fan, etc.), consult the specific attached documentation. If necessary, require it.

Safety during maintenance
When operating on gear reducer or on components connected to it, the **machine must be at rest, disconnected from power supply and cold**: disconnect motor (including auxiliary equipments) from power supply, gear reducer from load, be sure that safety systems are on against any accidental starting and, if necessary, pre-arrange mechanical locking devices (to be removed before commissioning).

Attention!
During the running the gear reducers could have **hot surfaces**; Always wait that the gear reducer or the gearmotor to cool before carrying out any operations. Further technical documentation (e.g. catalogs) can be downloaded from our website **www.rossi.com**.

Be sure that the structure on which gearmotor is fitted is plane, levelled and sufficiently dimensioned in order to assure fitting stability and vibration absence, keeping in mind all transmitted forces due to the masses, to the torque, to the radial and axial loads.

Position the gearmotor so as to allow a free passage of air for cooling both gear reducer and motor (especially at motor fan side).

Avoid: any obstruction to the air-flow; heat sources near the gearmotor that might affect the temperature of cooling-air and of gearmotor for radiation; insufficient air recycle or any other factor hindering the steady dissipation of heat.
Mount the gearmotor so as not to receive vibrations.

When external loads are present use pins or locking blocks, if necessary.

When fitting gear reducer and machine and/or gear reducer and eventual flange B5 it is recommended to use **locking adhesives** such as LOCTITE on the fastening screws (also on flange mating surfaces).
For outdoor installation or in a hostile environment protect the gearmotor with anticorrosion paint. Added protection may be afforded by water-repellent grease (especially around the rotary seating of seal rings and the accessible zones of shaft end).

Gearmotors should be protected wherever possible, and by whatever appropriate means, from solar radiation and extremes of weather; weather protection **becomes essential** when the low or high speed shafts or when motor is vertical with fan on the top.

For ambient temperatures higher than 40 °C or lower than 0 °C, contact Rossi S.p.A.

Before wiring-up the gearmotor, make sure that motor voltage corresponds to input voltage.
If direction of rotation is not as desired, invert two phases at the terminals.

If overloads are imposed for long periods or if shocks or danger of jamming are envisaged, then motor-protection, electronic torque limiters, fluid couplings, safety couplings, control units or other similar devices should be fitted.
Where duty cycles involve a high number of starts on-load, it is advisable to utilize **thermal probes** (fitted on the wiring) for motor protection; a thermal overload relay is unsuitable since its threshold must be set higher than the motor's nominal current rating.

Use varistors to limit voltage peaks due to contactors.

Attention!
Bearing life and good shaft and coupling running depend on alignment precision between the shafts.
Carefully align the gearmotor with the driven machine (with the aid of shims if need be), interposing flexible couplings whenever possible.
Whenever a leakage of lubricant could cause heavy damages, increase the frequency of inspections and/or envisage appropriate control devices (e.g.: remote oil level gauge, lubricant for food industry, etc.).

In polluting surroundings, take suitable precautions against lubricant contamination through seal rings or other.

For brake or non-standard motors, consult us for specific information.

Fitting of components to low speed shaft ends
It is recommended that the bore of parts keyed to low speed shaft ends is machined to K7 tolerance (H7 when load is uniform and light).
Before mounting, thoroughly clean mating surfaces and lubricate against seizure and fretting corrosion. Installing and removal operations should be carried out with pullers and jacking screws using the tapped hole at the shaft butt-end.

Machine pivot
For the machine pivot the gear reducer hollow shaft is to be keyed onto we recommend the dimensions stated on page 12.

Gear selection data sheet

1 Application conditions

Application / Industry sector

Type of machine to be driven

- ☐ new machine
- ☐ existing machine, running gear reducer currently applied

Ambient temperature [°C]

min	standard	max

Altitude [m above sea level]

Environment:

- ☐ normal (industrial) indoor
- ☐ normal (industrial) outdoor
- ☐ dusty
- ☐ corrosive / humid

Gear reducer position:

- ☐ small environment with limited air movement (v_{air} < 0,63 m/s)
- ☐ wide environment with free air movement (v_{air} > 1,25 m/s)
- ☐ open space, protected against extremes of weather and solar radiance

2 Load data

Required output speed [min^{-1}]

min	nominal	max

Torque required at low speed shaft [N m]

min	nominal	max

Required output power [kW]

min	nominal	max

Input speed (gear reducers) [min^{-1}]

min	nominal	max

Nature of load:

- ☐ uniform
- ☐ moderate overloads
- ☐ heavy overloads

Frequency of starting [starts/h]

Machine moment of inertia [kg m^2]

min	standard	max

Running time [h/d]

Total duration [h]

Duty cycle (S1 ... S10)

Load cycle attached

- ☐ yes
- ☐ no

3 Motor

Motor type:

- ☐ asynchronous three-phase (a.c.)
- ☐ asynchronous three-phase with inverter
- ☐ d.c. motor with relevant converter
- ☐ internal combustion motor (single-cylinder)
- ☐ internal combustion motor (multi-cylinder)

Power P_1 [kW]

min	nominal	max

Nominal speed n_1 [min^{-1}]

min	nominal	max

a.c. motor supply:

voltage [V]	frequency [Hz]

IEC motor size (a.c. motor)

Type of a.c. motor starting:

- ☐ direct
- ☐ Y / Δ
- ☐ soft starter / inverter

Electromagnetic motor

- ☐ parking brake
- ☐ work
- ☐ safety

Braking torque [N m]

Starting torque [N m]

Moment of inertia [kg m^2]

Electric motor design (a.c. and d.c.):

- ☐ with independent cooling fan
- ☐ with encoder:
- ☐ with tacho-generator

System of motor-gear reducer mounting:

- ☐ with coupling
- ☐ with trapezoidal belts

section	No.	d_m [mm]	d_1 [mm]

- ☐ with toothed belt drive

section	No.	d_m [mm]

Eventual limit to drive dimensions

4 Gear reducer

Mounting position

Direction of rotation of output shaft

- ☐ white arrow
- ☐ black arrow
- ☐ white and black arrow

Backstop device (if present)

- ☐ free rotation, white arrow
- ☐ free rotation, black arrow

Type of admitted cooling

- ☐ with fan
- ☐ with coil
- ☐ with internal exchanger
- ☐ with UR O/A unit
- ☐ with UR O/W unit

Type of machine coupling

- ☐ shaft mounting
- ☐ with fluid / flexible coupling
- ☐ with cardan joint
- ☐ with toothed belt drive

pitch	d_m	d_1	ϕ

- ☐ with chain

pitch	No.	z_2	z_3	overhang [mm]	ϕ

- ☐ straight tooth cylindrical gear

pitch	No.	z_2	z_3	overhang [mm]	ϕ

Eventual axial load F_a [N]

Eventual limit to drive dimensions

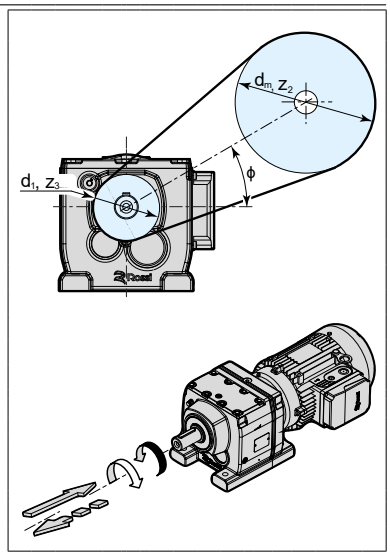

Frame size	With Technical System units	With SI units
starting or stopping **time** as a function of an acceleration or deceleration, of a starting or braking torque	$t = \frac{v}{a}$ [s] $t = \frac{Gd^2 \cdot n}{375 \cdot M}$ [s]	$t = \frac{J \cdot \omega}{M}$ [s]
velocity in rotary motion	$v = \frac{\pi \cdot d \cdot n}{60} = \frac{d \cdot n}{19{,}1}$ [m/s]	$v = \omega \cdot r$ [m/s]
angular velocity	$n = \frac{60 \cdot v}{\pi \cdot d} = \frac{19{,}1 \cdot v}{d}$ [min^{-1}]	$\omega = \frac{v}{r}$ [rad/s]
acceleration or deceleration as a function of starting or stopping time	$a = \frac{v}{t}$ [m/s^2]	
angular **acceleration** or **deceleration** as a function of a starting or stopping time, of a starting or braking torque	$\alpha = \frac{n}{9{,}55 \cdot t}$ [rad/s^2] $\alpha = \frac{39{,}2 \cdot M}{Gd^2}$ [rad/s^2]	$\alpha = \frac{\omega}{t}$ [rad/s^2] $\alpha = \frac{M}{J}$ [rad/s^2]
starting or stopping distance as a function of an **acceleration** or deceleration, of a final or initial velocity	$s = \frac{a \cdot t^2}{2}$ [m] $s = \frac{v \cdot t}{2}$ [m] $w = \frac{\alpha \cdot t^2}{2}$ [rad]	
starting or stopping **angle** as a function of an angular acceleration or deceleration, of a final or initial angular velocity	$\varphi = \frac{n \cdot t}{19{,}1}$ [rad]	$\varphi = \frac{\omega \cdot t}{2}$ [rad]
mass	$m = \frac{G}{g}$ [$\frac{kgf\ s^2}{m}$]	m è l'unità di massa [kg]
weight (weight force)	G è l'unità di peso (forza peso) [kgf]	$G = m \cdot g$ [N]
force in vertical (lifting), horizontal, inclined motion of translation (μ = coefficient of friction; φ = angle of inclination)	$F = G$ [kgf] $F = \mu \cdot G$ [kgf] $F = G\ (\mu \cdot \cos\varphi + \text{sen}\ \varphi)$ [kgf]	$F = m \cdot g$ [N] $F = \mu \cdot m \cdot g$ [N] $F = m \cdot g\ (\mu \cdot \cos\varphi + \text{sen}\ \varphi)$ [N]
dynamic moment Gd², moment of inertia J due to a motion of translation (numerically $J = \frac{Gd^2}{4}$)	$Gd^2 = \frac{365 \cdot G \cdot v^2}{n^2}$ [kgf m^2]	$J = \frac{m \cdot v^2}{\omega^2}$ [kg m^2]
torque as a function of a force, of a dynamic moment or of a moment of inertia, of a power	$M = \frac{F \cdot d}{2}$ [kgf m] $M = \frac{Gd^2 \cdot n}{375 \cdot t}$ [kgf m] $M = \frac{716 \cdot P}{n}$ [kgf m]	$M = F \cdot r$ [N m] $M = \frac{J \cdot \omega}{t}$ [N m] $M = \frac{P}{\omega}$ [N m]
work, energy in motion of translation, in rotary motion	$W = \frac{G \cdot v^2}{19{,}6}$ [kgf m] $W = \frac{Gd^2 \cdot n^2}{7160}$ [kgf m]	$W = \frac{m \cdot v^2}{2}$ [J] $W = \frac{J \cdot \omega^2}{2}$ [J]
power in motion of translation, in rotary motion	$P = \frac{F \cdot v}{75}$ [CV] $P = \frac{M \cdot n}{716}$ [CV]	$P = F \cdot v$ [W] $P = M \cdot \omega$ [W]
power available at the shaft of a single-phase motor ($\cos\varphi$ = power factor)	$P = \frac{U \cdot I \cdot \eta \cdot \cos\varphi}{736}$ [CV]	$P = U \cdot I \cdot \eta \cdot \cos\varphi$ [W]
power available at the shaft of a three-phase motor	$P = \frac{U \cdot I \cdot \eta \cdot \cos\varphi}{425}$ [CV]	$P = 1{,}73 \cdot U \cdot I \cdot \eta \cdot \cos\varphi$ [W]

Note. Acceleration or deceleration are understood constant; motion of translation and rotary motion are understood rectilinear and circular respectively.

Notes

Notes

Notes

Solutions for
an evolving
industry

Rossi S.p.A.
Via Emilia Ovest 915/A
41123 Modena - Italy

info@rossi.com
www.rossi.com

2635.CAT.iFIT-iC-iO-iP-24.07-1-EN

© Rossi S.p.A. Rossi reserves the right to make any modification whenever to this publication contents. The information given in this document only contains general descriptions and/or performance features which may not always specifically reflect those described.

The Customer is responsible for the correct selection and application of product in view of its industrial and/or commercial needs, unless the use has been recommended by technical qualified personnel of Rossi, who were duly informed about Customer's application purposes. In this case all the necessary data required for the selection shall be communicated exactly and in writing by the Customer, stated in the order and confirmed by Rossi. The Customer is always responsible for the safety of product applications. Every care has been taken in the drawing up of the catalog to ensure the accuracy of the information contained in this publication, however Rossi can accept no responsibility for any errors, omissions or outdated data. Due to the constant evolution of the state of the art, Rossi reserves the right to make any modification whenever to this publication contents. The responsibility for the product selection is of the Customer, excluding different agreements duly legalized in writing and undersigned by the Parties.