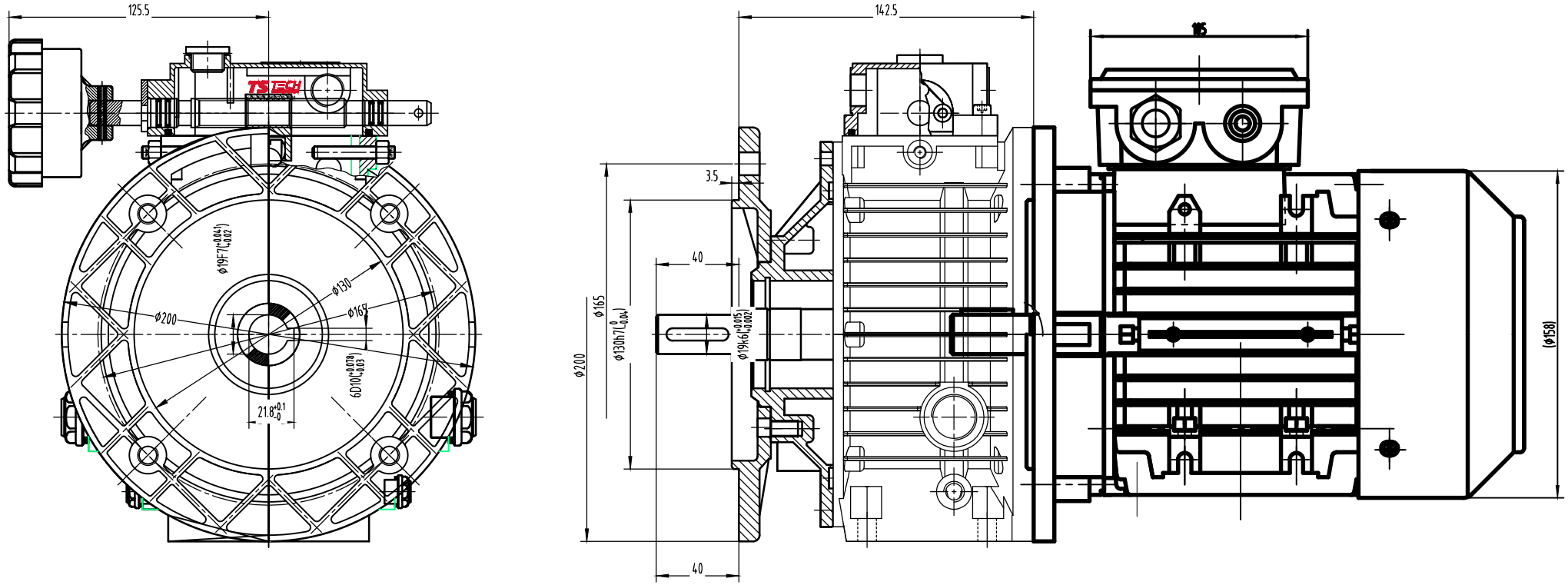



TS TECH DRIVE & MOTION
(주)티에스테크솔루션
TS TECH SOLUTION CORP, Korea
TEL. 02-6670-0090 FAX. 02-6670-0094


| CUSTOMER APPROVEAL | | AMEND | | | CUSTOMER | | | | | | | |
|---|---|---|---|---|---|---|---|---|---|---|---|---|
| MECHANICAL | ELECTRICAL | △ | | | MODEL | | UDL010 | | | | | |
| | | △ | | | DESCRIPTION | | | | | | | |
| | | △ | | | DRAWN | | DATE | | REV | A | SCALE | |
| | | △ | | | CHECKED | | DATE | | UNIT | MM | PAGE | - |
| | | | | | APPROVED | | DATE | | | | | |