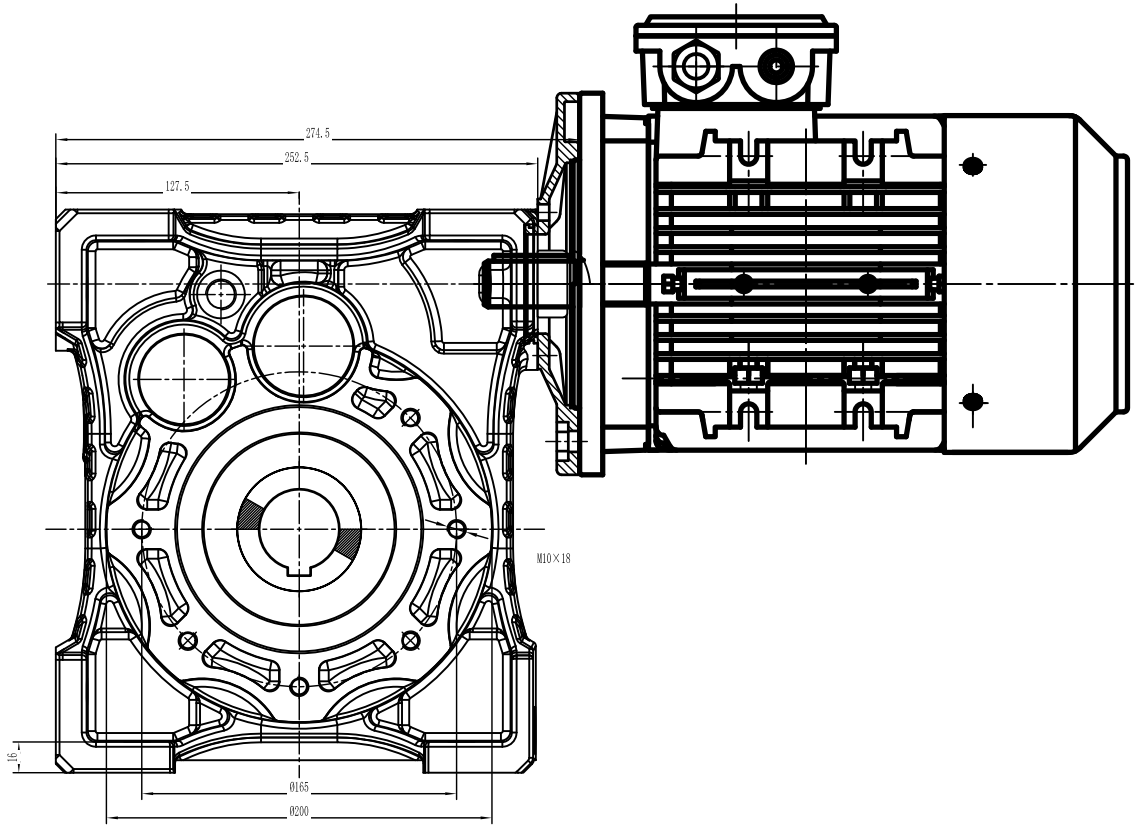

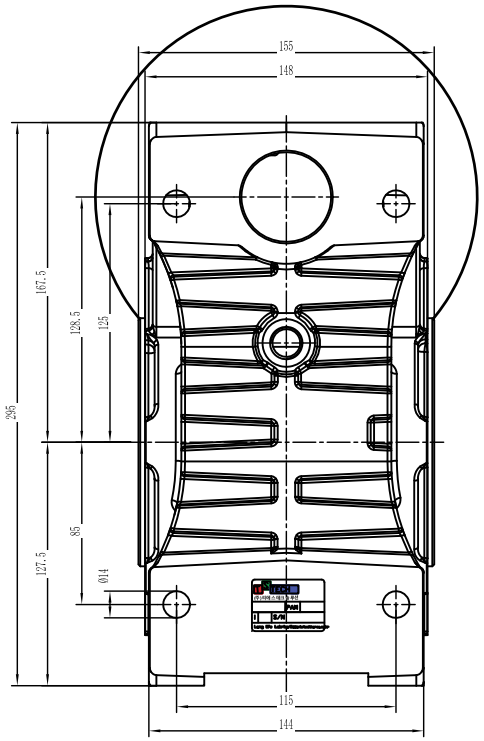

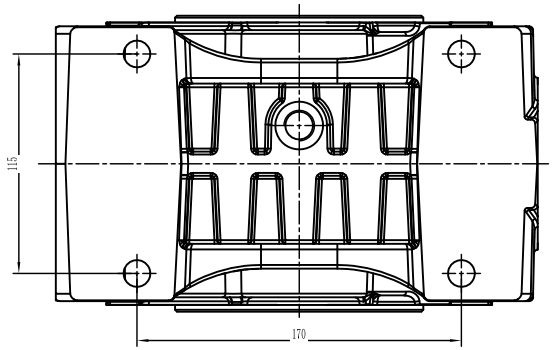

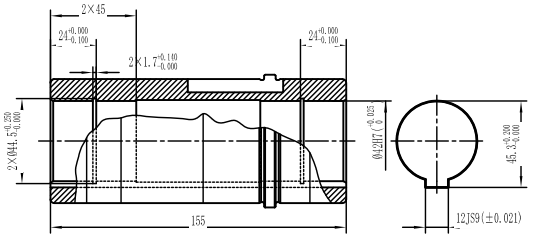

(주)티에스테크솔루션
TS TECH SOLUTION CORP, Korea
TEL. 02-6670-0090 FAX. 02-6670-0094

CUSTOMER APPROVEAL		AMEND			CUSTOMER							
MECHANICAL	ELECTRICAL	△			MODEL		THW110 90B5					
		△			DESCRIPTION							
		△			DRAWN		DATE		REV	A	SCALE	
		△			CHECKED		DATE		UNIT	MM	PAGE	-
					APPROVED		DATE					